NOTICE: This standard has either been superseded and replaced by a new version or discontinued. Contact ASTM International (www.astm.org) for the latest information.

Designation: F 1269 – 89 (Reapproved 1995)$^{\epsilon 1}$

Test Methods for Destructive Shear Testing of Ball Bonds [1]

This standard is issued under the fixed designation F 1269; the number immediately following the designation indicates the year of original adoption or, in the case of revision, the year of last revision. A number in parentheses indicates the year of last reapproval. A superscript epsilon (ϵ) indicates an editorial change since the last revision or reapproval.

ϵ^1 NOTE—Keywords were added editorially in June 1995.

1. Scope

1.1 These test methods cover tests to determine the shear strength of a series of ball bonds made by either thermal compression or thermosonic techniques.

NOTE 1—Common usage at the present time considers the term "ball bond'' to include the enlarged spheriodal or nailhead portion of the wire, (produced by the flameoff and first bonding operation in the thermal compression and thermosonic process, or both,) the underlying bonding pad, and the ball bond-bonding pad interfacial-attachment area or weld interface.

1.2 These test methods cover ball bonds made with small diameter (from 18 to 76-µm (0.0007 to 0.003-in.)) wire of the type used in integrated circuits and hybrid microelectronic assemblies.

1.3 These test methods can be used only when the ball height and diameter are large enough and adjacent interfering structures are far enough away to allow suitable placement and clearance (above the bonding pad and between adjacent bonds) of the shear test ram.

1.4 These test methods are destructive. They are appropriate for use in process development or, with a proper sampling plan, for process control or quality assurance.

1.5 A nondestructive procedure is possible;[2] although it may be contra indicated due to the possible interference with adjacent wire bonds and microcircuit components.

1.6 The values stated in SI units are to be regarded as the standard. The values given in parentheses are for information only.

1.7 *This standard does not purport to address all of the safety concerns, if any, associated with its use. It is the responsibility of the user of this standard to establish appropriate safety and health practices and determine the applicability of regulatory limitations prior to use. Fig. 1Fig. 2Fig. 3Fig. 4Fig. 5Fig. 6Fig. 7Fig. 8Fig. 9*

2. Referenced Documents

2.1 *ASTM Standards:*

F 458 Practice for Nondestructive Pull Testing of Wire Bonds[3]

F 459 Test Methods for Measuring Pull Strength of Microelectronic Wire Bonds[3]

2.2 *NIST Document:*

NBS Handbook 105-1 Specification and Tolerances for Reference Standards and Field Standards, Weights and Measures[4]

IOLM Class M2-Circular 547-1 Precision Laboratory Standards of Mass and Laboratory Weights[4]

2.3 *Military Standard:*

MIL-STD 883C, Method 2010[5]

3. Terminology

3.1 *Definitions of Terms Specific to This Standard:*

3.1.1 *ball lift*—a separation of the ball bond at the bonding pad interface with little or no residual (less than 25 % of the bond deformation area) ball metallization remaining on the bonding pad (that remains essentially intact). In the case of gold ball bonds on aluminum pad metallization, a ball lift is defined as a separation of the ball bond at the bonding pad interface with little or no intermetallic formation either present or remaining (area of intermetallic less than 25 % of the bond deformation area).

3.1.1.1 *Discussion*—ntermetallic refers to the aluminum gold alloy formed at the ball bond pad metallization interfacial area where a gold ball bond is attached to an aluminum pad metallization.

3.1.2 *ball shear (weld interface separation)*—an appreciable intermetallic (in the case of the aluminum-gold system) and ball metallization, or both, (in the case of the gold-to-gold system) remains on the bonding pad (area of remaining metal or intermetallic greater than 25 % of the bond deformation area).

3.1.3 *bonding pad lift (substrate metallization removal)*—a separation between the bonding pad and the underlying substrate. The interface between the ball bond and the residual pad metallization attached to the ball remains intact.

[1] These test methods are under the jurisdiction of ASTM Committee F-1 on Electronics and is the direct responsibility of Subcommittee F01.07 on Wire Bonding.

Current edition approved Dec. 29, 1989. Published March 1990.

[2] Panousis, N. T., and Fischer, M. W., "Nondestructive Shear Testing of Ball Bonds'', *International Journal of Hybrid Microelectronics*, Vol 6, No. 1, 1983, p. 142.

[3] *Annual Book of ASTM Standards*, Vol 10.04.

[4] Available from the National Technical Information Service, 5285 Port Royal Rd., Springfield, VA 22161.

[5] Available from Standardization Documents Order Desk, Bldg. 4 Section D, 700 Robbins Ave., Philadelphia, PA 19111-5094, Attn: NPODS.

Copyright © ASTM, 100 Barr Harbor Drive, West Conshohocken, PA 19428-2959, United States.

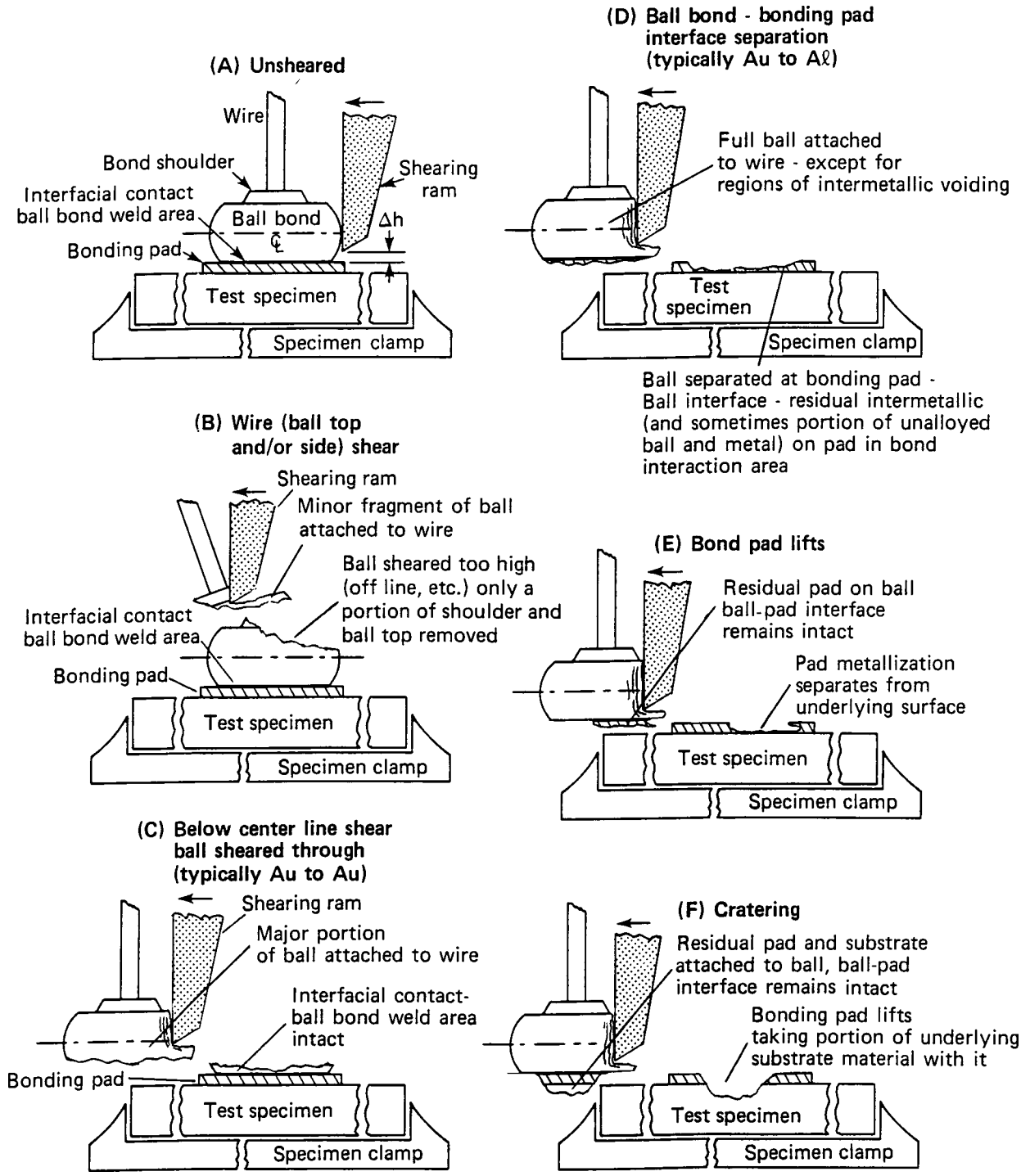

FIG. 1 Ball Shear Failure Modes

3.1.4 *cratering*—bonding pad lifts taking a portion of the underlying substrate material with it. Residual pad and substrate material are attached to the ball. The interface between the ball and this residual material remains intact.

3.1.4.1 *Discussion*—It should be noted that cratering can be caused by several factors including the ball bonding operation, the post-bonding processing, and even the act of shear testing itself. If cratering occurs, chemically etch off the ball bonds and bond pads of untested units and microscopically check for cratering. Cratering caused prior to the shear test operation is unacceptable.

Various aspects of the failure mode definitions are illustrated in Fig. 1.

4. Summary of Test Methods

4.1 The microelectronic device with the ball bond (wire bond (see Practice F 458 and Test Methods F 459)) to be tested is held firmly in an appropriate fixture. A shearing ram is

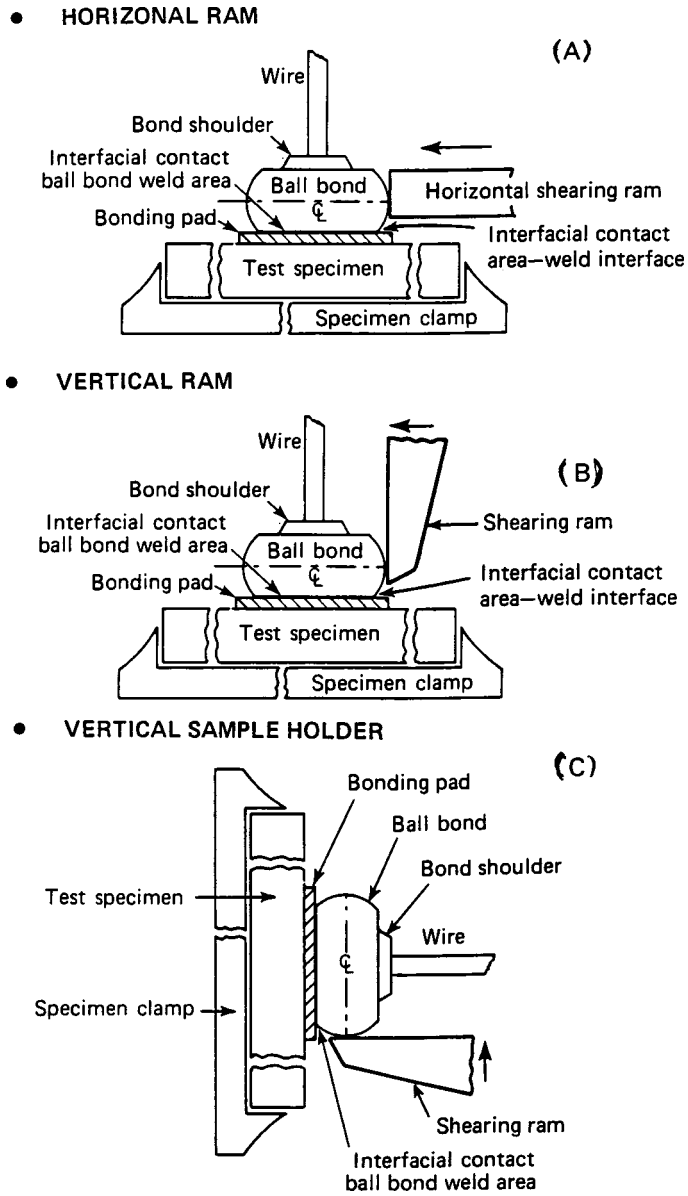

NOTE 1—Schematic diagrams of the ball shear test. (A) Horizontal sample and horizontal ram. (B) Horizontal sample and vertical ram. (C) Vertical sample and vertical ram. The bonded (welded) area may be less than the interfacial contact area (area of intimate contact as observed optically.) Typical dimensions with 25-µm (1-mil) diameter wire are: ball diameter 75 to 110 µm (3.0 to 4.5 mil) and ball height 25 µm (1 mil) or less.

FIG. 2 Ball Shear Test Configurations

positioned parallel to the substrate and approximately 25 µm (1 mil) above the substrate metallization. A typical shearing configuration is shown in Fig. 2. The ram is then moved into the ball until the ball separates from the substrate. The force applied to the ram, in order to cause the failure of the ball bond, is recorded. The mode of failure (for example, ball lift, weld-interface separation, cratering, etc.) is observed and recorded.

NOTE 2—Bonds made with larger diameter wire may require that the ram be placed further above the substrate, but in all cases the ram should be located below the ball's horizontal centerline. The distance below the center should be at least half the distance between the center line and the substrate.

NOTE 3—Besides ball separation from the substrate, other modes of failure are possible and will be described in Section 6.

5. Significance and Use

5.1 Failure of microelectronic devices is often due to the failure of an interconnection bond. A common type of interconnection bond is the thermo compression or thermosonic gold wire bond. A very important element of this interconnection is the first bond or ball bond. These test methods can assist in maintaining control of the process for making ball bonds. They can be used to distinguish between weak and nonadherent ball bonds, of both, and bonds that are acceptably strong.

5.2 These test methods are appropriate for on-line use in process control, for process development, for purchase specifications, and for research in support of improved yield and reliability. Since the ball shearing method tests only the first bond in a microelectronic wire bond interconnection system, it

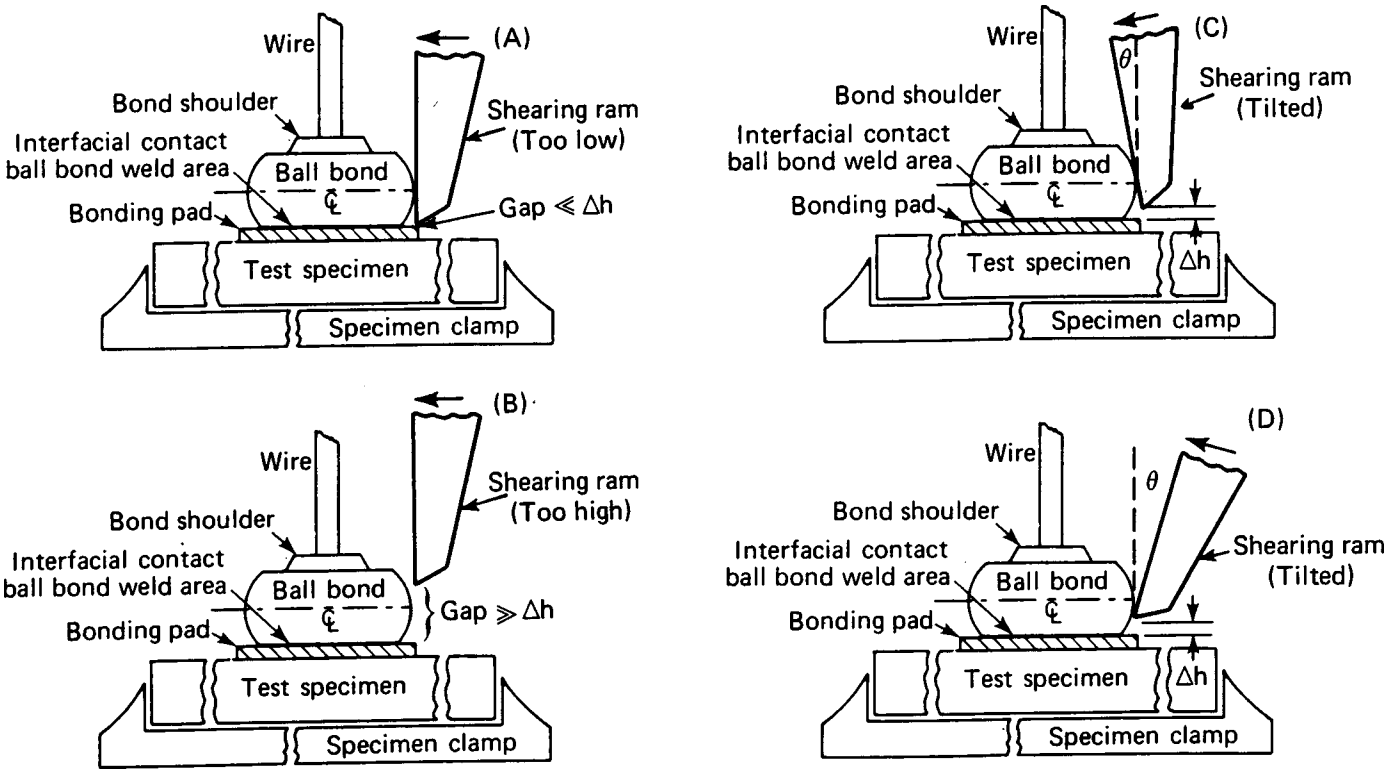

FIG. 3 Ball Shear Interferences

must be used in a complementary fashion[6,7] with the wire bond pull test.[3]

6. Inferences

6.1 The most common interference is wire shear in which the ball is sheared too high or offline. Only a minor fragment of the ball is attached to the wire. The major portion of the ball remains on the pad with the bond-pad weld interface region intact. Wire shear is illustrated in Fig. 1, View B.

6.2 Many of the common interference modes (such as wire shear) are caused by improper positioning of the ram during the ball shear operation as shown in Fig. 3. Rams that are too high (Fig. 3, View B) or angled upward (Fig. 3, View D) result in lower than normal shear strength values. Rams that are angled downward (Fig. 3, View C and Fig. 4) or positioned too low (Fig. 3, View A) will strike the bonding pad and the substrate, or both, (chip) and cause inordinately high shear strength as well as potentially damage the shearing ram.

6.3 Shearing gold ball bonds on gold metallization pads or substrates can lead to friction rewelding as illustrated in Fig. 4. As a strongly welded gold bond is sheared, the ball tends to tip away from the ram and contact the substrate as it moves. The ball smears against the pad metallization and rewelds itself often several times before it finally clears the metallization.

6.4 In bonding systems in which excessive intermetallic growth has formed around the ball bond, the shearing ram may contact the intermetallic rather than the ball bond and thus the shear readings can be in error (that is, weak ball bond shear is masked by the shear strength of the strong intermetallic wreath surrounding it.

7. Apparatus

7.1 *Ball Bond Shearing Machine*—Apparatus for measuring the ball bond shear strength are required with the following components:

7.1.1 *Shearing Ram*—Various shearing tools or rams have been recommended in the technical literature, but the ones that appear the most effective have a flat chisel shape with a shearing edge dimension equal to approximately 1 to 2-ball diameters as shown in Fig. 5. For 25.4-µm (1-mil) diameter wire this dimension would be approximately 0.152 mm (6 mils).

7.1.2 *Shearing and Gaging Mechanism*—Mechanism for applying a measured vertical (or horizontal) force to the shearing is needed. The mechanism shall incorporate a means for recording maximum force applied and shall be capable of applying the shear force at a uniform rate of ram motion. Force application rate can be variable (either continuously or in fixed steps) to accommodate different shearing conditions and configurations, or both. In no case should the ram speed exceed 6.0 mm/s.

NOTE 4—It has been shown[2] that the shear force is independent of force application rate in the range from 0.25 to 6.0 mm/s.

NOTE 5—Electronic-strain gage-force reading mechanisms are preferred; however, the dynamometer type mechanisms known as" gram

[6] Charles, Jr., H. K., and Clatterbaugh, G. V., "Ball Bond Shearing—A Complement to the Wire Bond Pull Test'', International Journal of Hybrid Microelectronics, Vol 6, No. 1, 1983, p. 171.

[7] Harman, G. G. "The Microelectronic Ball-Bond Shear Test—A Critical Review and Comprehensive Guide to its Use'', International Journal of Hybrid Microelectronics, Vol 6, No. 1, 1983, p. 127.

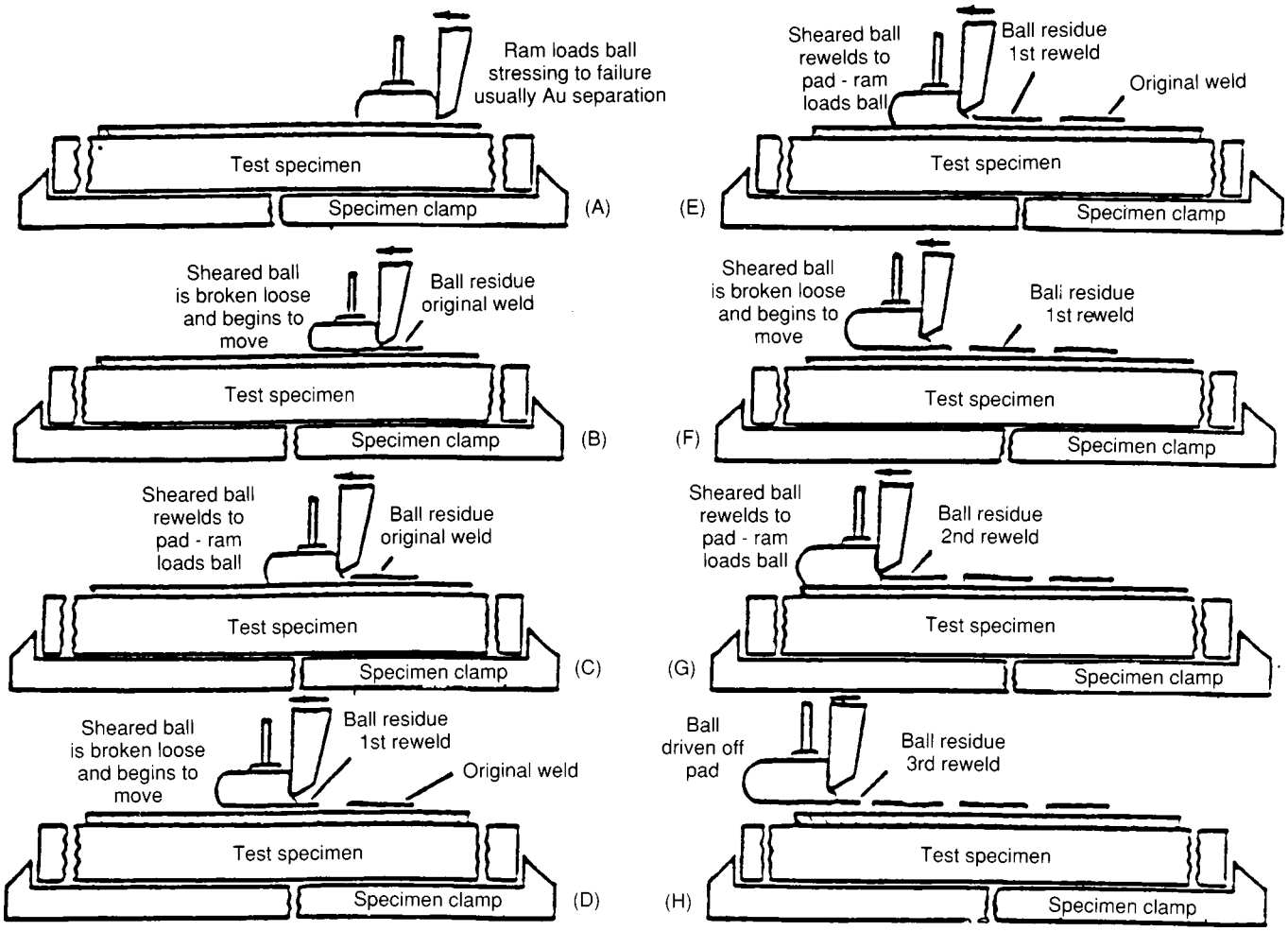

FIG. 4 Gold-to-Gold Friction Rewelding

gages'' may be used satisfactorily providing careful calibration test procedures are employed.

7.1.2.1 The range of the force reading gage shall be selected so that the maximum scale reading will be no greater than three times the expected average ball bond shear strength. Anticipated force ranges for the various wire sizes and materials covered by these test methods are summarized[7] in Fig. 6.

NOTE 6—The maximum scale range of the electronic strain gage with digital readout may be larger than three times the expected average shear strength providing the accuracy specified in 10.7.6 is maintained over the entire range of the load cell.

7.1.3 *Microscope and Light Source*—Zoom microscope with a light source for viewing the device under test is needed. The minimum magnification shall be at least 60×.

7.1.4 *Device Holder*— A clamping mechanism for rigidly holding the device under test in either a horizontal or vertical position depending upon shear tester configuration is required (see 7.2).

7.1.5 *Calibration Masses*—At least five masses (weights) with mass values known to an accuracy of 0.5 % (or better, such as NBS Class T or IOLM Class M2 (NBS Handbook 105-1 and Circular 547. IOLM) [4]) sized to cover the shearing and gaging mechanism range of force measurements and suitably configured so that they may be supported by the shear mechanism for calibration, are needed. In the case of horizontal shearing ram motion, the tester mechanism should rotate 90° to allow the weights to be hung from the shearing ram. Other indirect methods of calibration may also be possible for this configuration.

7.1.6 *Shear Test Tolerances*—The shear test sample holder or the shear test ram must be able to be positioned to tolerances better than ±10 µm (± 0.4 mils) and the *X* and *Y* directions (plane of the bonding pad) and 5.0 µm (±0.2 mils) in the *Z* or the above substrate direction. The shearing rams over travel (distance it proceeds from the point of ball contact) should be limited to 2-ball diameters. Additional over travel may be allowed in cases where the excessive ram motion does not damage other bonds or the device under test.

7.2 Typical shear test configurations are illustrated in Fig. 7. View a shows a horizontal test system with horizontal shearing ram motion. View b presents a vertical test system with vertical shearing ram motion.

8. Sampling

8.1 Since the shear test method is destructive, it shall be performed on a sampling basis. The sample selected should be representative of the ball bonds of interest. The size of the sample and the method of selection shall be agreed upon by the

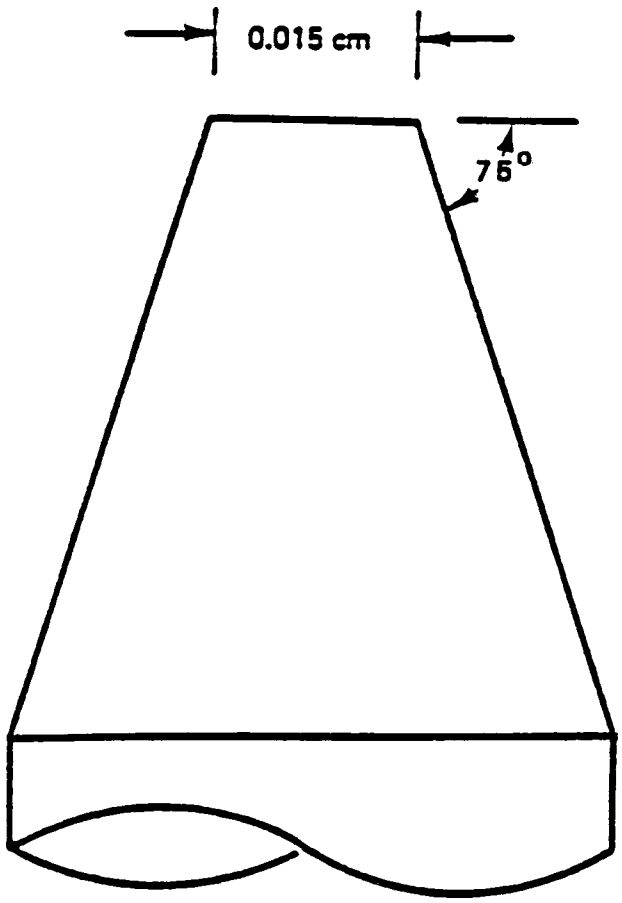

NOTE 1—Tool face is 1 to 2 ball diameters.

FIG. 5 Schematic Representation of Shearing Tool 25.4μμμ m Diameter Wire

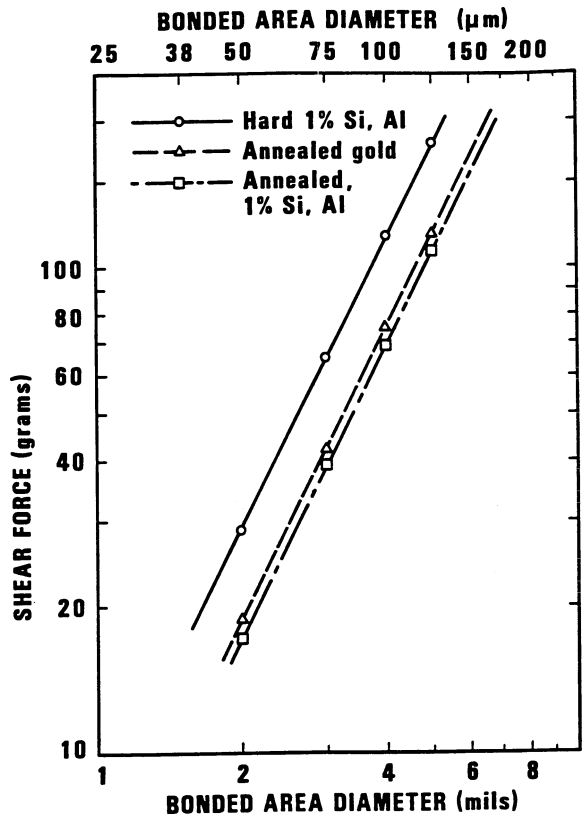

FIG. 6 Shear Force Versus Diameter of the Bonded Area for Various Wire Materials and Sizes

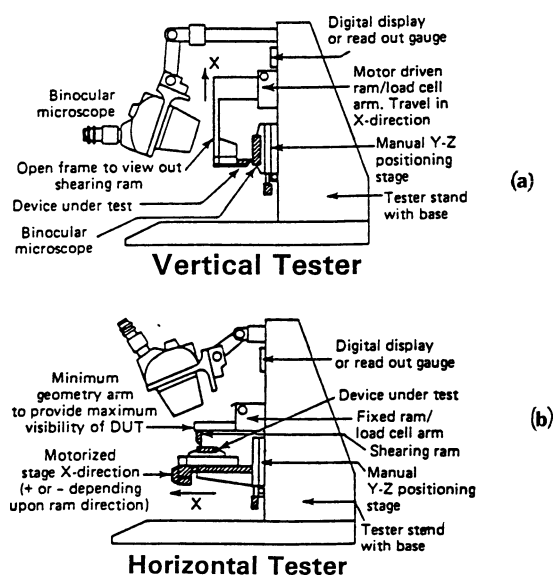

FIG. 7 Shear Tester Configurations

parties to the test. The sample space should be as large as practical (nominally 35 bonds) to ensure the proper statistical inferences from quantities such as the mean shear force (X) and its standard deviation (σ).

9. Calibration

9.1 Calibrate the ball bond shearing machine at the beginning and of each series of tests, or at the beginning and end of each day if the test sequence spans more than one day.

9.2 For multifunction wire test machines, set up the test machine in the proper configuration for the ball bond shear test, otherwise for a dedicated ball shear tester proceed with the calibration steps in 9.3.

9.3 Calibrate the shearing and gaging mechanism.

9.3.1 For mechanisms or systems that incorporate a calibration standard or mode, either calibrate the mechanism according to the manufacturer's instructions or in accordance with the procedure in 9.3.2.

9.3.2 For mechanisms without a built-in calibration mode, select five masses (weights) that will provide at least five calibration points over the shear force range of interest. Attach a selected calibration mass to the shearing and gaging mechanism in such a manner as to load the shearing ram in a direction normal to the ball shearing force. Observe and record the measured force in grams (force) (milli newtons). Repeat this operation for the four remaining masses. Plot the measured force values (gage force) as a function of the forces applied by the masses. A calibration curve should be constructed using a least-squares fitting technique. The curve then can be used to interpret gage readings in terms of actual force loadings.

10. Procedure

10.1 *Method A—Device in Horizontal Plane (Corresponds to View a of* Fig. 7*)*:

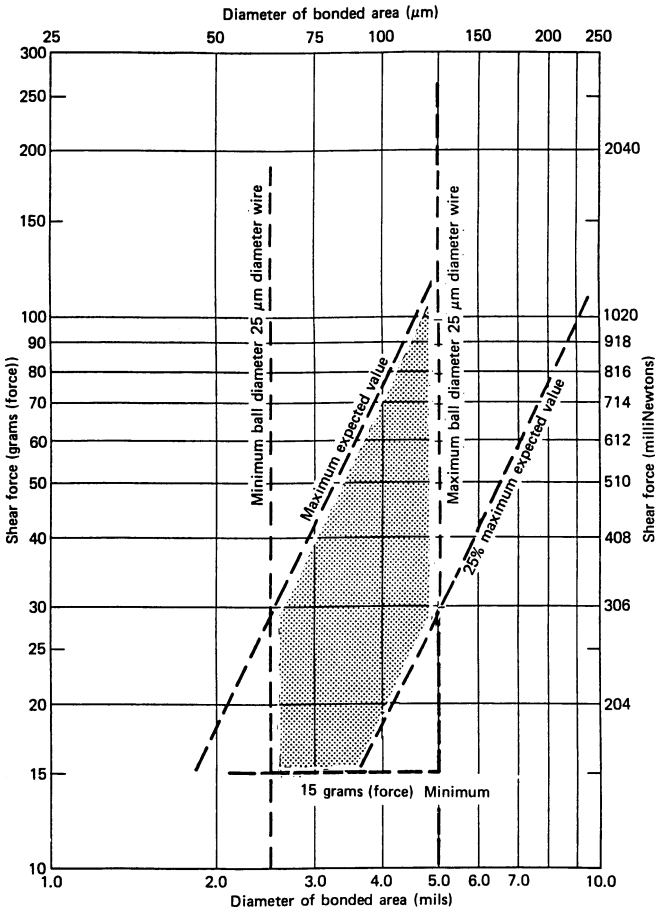

FIG. 8 Ball Bond Shear Strength Window—25.4μm-Diameter Gold Wire Bonded to Aluminum Pad Metallization

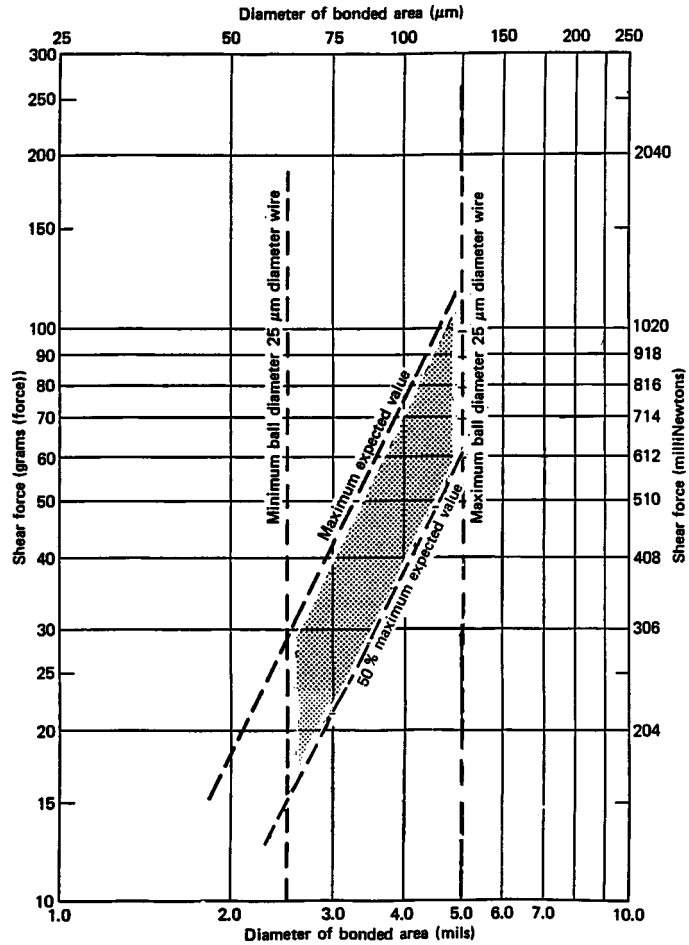

FIG. 9 Ball Bond Shear Strength Window—25.4μm-Diameter Gold Wire Bonded to Gold (Thin Film) Pad Metallization

10.1.1 Place the device having the ball bond to be tested in the device holder so that the plane of the device (the bonding pad or substrate) is horizontal, as judged visually.

10.1.2 Position the microscope and light source and focus the microscope so that the ball bond to be tested is clearly seen in the microscope field.

NOTE 7—Only ball bonds that are visually acceptable should be tested. Visual acceptance should be agreed upon by all parties prior to the test and should be based on a standard criterion such as MIL-STD 883C, Method 2010. [5]

10.1.3 Position the device hold so that the ball bond to be tested is located adjacent to the shearing ram.

10.1.4 While viewing the ball bond and shearing ram through the microscope, maneuver the shearing ram in line with the ball bond and lower the shearing tool tip below the ball's horizontal center line approximately equidistant from the center line to the substrate (nominally 25.4 μm (1 mil) above the substrate metallization for 25.4-μm diameter wire), as determined by micrometer setting of *X*, *Y*, and *Z* stage (Make sure that the ram is brought in contact with the substrate and then is backed off the appropriate distance.).

10.1.5 Activate the shearing mechanism while observing the ball bond and the shearing ram through the microscope. If the ram is observed to slip to the side of the ball or up over the top and strike the substrate, or both, as the force is applied, then discount the recorded shear value and an interference mode indicated (Section 6). Similarly, exercise care to avoid conditions of friction rewelding, and advanced intermetallic growth, or both (6.3). If the ram strikes another object prior to shearing the ball and no damage has been sustained by the ball in question then reposition the ram and repeat the test.

10.1.6 Measure and record the force required for shearing the ball bond. Determine and record the correct force from the calibration curve if the procedure of 9.3.2 is used. Determine the shear force to an accuracy of (1), ≥ to the smaller of $\frac{1}{2}d^2/d_o^2$ gf, where d is the wire diameter under test and d_o = 25.4 μm (1 mil); or (2), 0.5 % of the maximum scale reading of the range employed. Record the identification of the ball bond and the identification of the device (chip or substrate) under test (see 11.1.4 and 11.1.5 in particular).

10.1.7 Examine the remaining parts of the ball bond (attached to the wire and the substrate) at an appropriate magnification to determine the nature of the failure.

10.1.8 Record the ball bond failure mode as being one of the following:

Mode Number	Mode Description
(1)	Ball Lift
(2)	Ball Shear
(3)	Bonding Pad Lift
(4)	Cratering

(5) Interference—Wire Shear
(6) Interference—Other (describe, for example, excessive intermetallic-formation around the ball, friction rewelding, etc.). User is free to assign numbers (6 and above) to a particular interference mode of interest.

10.2 *Method B—Device in Vertical Plane*:

10.2.1 Place the device having the ball bond to be tested in the vertical clamping device.

10.2.2 Perform steps 10.1.2 through 10.1.8.

11. Report

11.1 For Methods A and B report the following information:

11.1.1 Name of the person performing the test,

11.1.2 Date of the test,

11.1.3 Identification of the ball shear test system and the method designator (A or B),

11.1.4 Identification of the microelectronic device under test,

11.1.5 Identification of each ball bond sheared, including location, ball diameter (necessary to use Fig. 8, Fig. 9 and Fig. 10, paragraphs 12.2 and 12.3), wire size and material, and whether thermosonic or thermocompression bonding,

11.1.6 Correct shear strength in grams-force or millinewtons required to separate the ball bond from the microelectronic device, and

11.1.7 Mode of each ball bond failure.

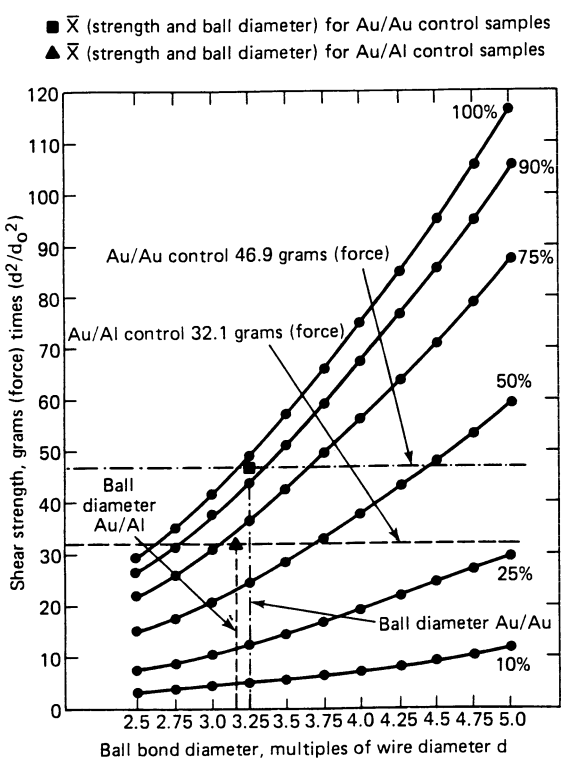

NOTE 1—Shear strength values for 25.4 µm diameter wire are read directly by setting $d = d_o = 25.4\mu$ m. Values for other diameters, d, are obtained by evaluating the factor (d^2/d_o^2) and using it to scale the ordinate. The parametric percentages represent the effective weld area (as compared to the maximum weld area as determined by the ball diameter). The 100 % curve is based on the shear strength of gold wire 91 MPa (13 000 psi) as determined by Harman.[7] The specific points (■, |a9) indicate the average shear values for the round robin gold-to-gold and gold-to-aluminum control samples, respectively.

FIG. 10 Ball Bond Shear Strength Versus Ball Bond Diameter for Gold Wire

12. Precision and Bias

12.1 An extensive round robin interlaboratory test program was conducted (see table in 12.1.1)[8] for 25.4-µm diameter gold ball bonds to both thin film gold metallization (on Al_2O_3 polycrystal) and thin film aluminum on SiO_2(on silicon). The round robin clearly indicated that repeatable ball shear measurements can be made between laboratories using different testing machines and operators. Coefficients of variation (σ/x) below 20 % are routinely achievable regardless of the mean value of the bond shear strength distribution and that interference percentages can be kept acceptably low (that is, less than 10 %).

12.1.1 Based on the round robin results, the following were values obtained for 25.4-µm diameter gold wire:

	Aluminum Metallization (on SiO_2)	
	Control Group, gf	Round Robin, gf
$\bar{x}$	32.1	32.0
σ	4.5	4.1
$\sigma/\bar{x}$	0.14	0.13
$\bar{x} - 3\sigma$	19.6	19.7
	Gold Metallization (Thin Film on Al_2O_3)	
	Control Group, gf	Round Robin, gf
$\bar{x}$	46.9	51.9
σ	3.9	5.5
$\sigma/\bar{x}$	0.083	0.105
$\bar{x} - 3\sigma$	35.2	35.4

12.1.2 These results indicate that for the two-systems minimum individual reading (x) values may be set for process control purposes. These numbers ($x - 3\sigma$) are 20 and 35 gf respectively. Lower minimum values for x (and x) could be acceptable depending on package type metallizations, wire material, and expected usage. These values should be negotiated between vendor and customer, but in no case should an individual shear value <15 gf for 25.4-µm diameter wire be acceptable. It has been shown that at 15 gf and above, no interaction occurs between the wire bond pull test and the ball shear test, thus allowing the two tests to be used in a complementary mode.[2,6,7]

NOTE 8—In no circumstances with aluminum metallization should an x be less than 25 % of the maximum expected shear value for the given average sample ball diameter as described in 12.2, 12.3 and Fig. 8, Fig. 9 and Fig. 10.

NOTE 9—In no circumstances with a gold-to-gold bond should an x be less than 50 % of the maximum expected shear value for the given average sample ball diameter as described in 12.2, 12.3 and Fig. 8, Fig. 9, and Fig. 10.

12.1.3 Numbers for other diameter wires (d) can be found by multiplying the force readings by $d^2/d_o^2$where $d_o = 25$ µm. In all cases, the coefficient of variation should remain ≥0.25. These numbers are only meaningful if there is a reasonable number of samples in the test space (for example ≤35) and the resultant histogramic distribution displays no bimodality.

NOTE 10—The round robin also pointed out the need for careful

[8] Charles, Jr., H. K., "Ball Bond Shear Testing: An Interlaboratory Comparison'', Proceeding of the 1986 International Symposium for Microelectronics, Atlanta, GA, October 6–8, 1986, p. 265.

observation of the failure mode and how incorrect interference identification can seriously affect ball shear statistical data.

12.2 A ball-bond shear strength window for various size bonds using 25.4-µm diameter gold wire bonded to aluminum pad metallization is shown in Fig. 8. A similar shear strength window for gold-to-gold bonds is shown in Fig. 9. Windows for other diameter wires (d) can be obtained by multiplying the for reading by d^2/d_o^2 where $d_o = 25.4$ µm. The maximum expected value is based on the shear value of pure gold 91 MPa (13 000 psi) as determined by Harman[7]. The range of acceptable ball diameters is 2.5 to 5.0 times the wire diameter according to MIL-Standard 883C.[5]

NOTE 11—Thick film gold or other metallized substrates were not considered in the round robin but would be similarly evaluated.

12.3 Another way of displaying the data shown in Fig. 8 and Fig. 9 is given in Fig. 10. This presents the ball shear strength as a function of bond diameter with the effective weld area given as a parameter. Analysis of both round robin data [8] and a literature survey[7,8] indicate that for high quality gold-to-gold bonds the effective interface weld area should be 90 to 95 % while for gold-to-aluminum bonds this number is reduced to 70 to 75 %. Again these factors are based on the shear strength of pure gold as determined by Harman.[7]

13. Keywords

13.1 ball bonds; shear testing; wire bonding

The American Society for Testing and Materials takes no position respecting the validity of any patent rights asserted in connection with any item mentioned in this standard. Users of this standard are expressly advised that determination of the validity of any such patent rights, and the risk of infringement of such rights, are entirely their own responsibility.

This standard is subject to revision at any time by the responsible technical committee and must be reviewed every five years and if not revised, either reapproved or withdrawn. Your comments are invited either for revision of this standard or for additional standards and should be addressed to ASTM Headquarters. Your comments will receive careful consideration at a meeting of the responsible technical committee, which you may attend. If you feel that your comments have not received a fair hearing you should make your views known to the ASTM Committee on Standards, at the address shown below.

This standard is copyrighted by ASTM, 100 Barr Harbor Drive, PO Box C700, West Conshohocken, PA 19428-2959, United States. Individual reprints (single or multiple copies) of this standard may be obtained by contacting ASTM at the above address or at 610-832-9585 (phone), 610-832-9555 (fax), or service@astm.org (e-mail); or through the ASTM website (www.astm.org).