Designation: E 452 – 97

AMERICAN SOCIETY FOR TESTING AND MATERIALS
100 Barr Harbor Dr., West Conshohocken, PA 19428
Reprinted from the Annual Book of ASTM Standards. Copyright ASTM

Standard Test Method for Calibration of Refractory Metal Thermocouples Using a Radiation Thermometer[1]

This standard is issued under the fixed designation E 452; the number immediately following the designation indicates the year of original adoption or, in the case of revision, the year of last revision. A number in parentheses indicates the year of last reapproval. A superscript epsilon (ϵ) indicates an editorial change since the last revision or reapproval.

1. Scope

1.1 This test method covers the calibration of refractory metal thermocouples using a radiation thermometer as the standard instrument. This test method is intended for use with types of thermocouples that cannot be exposed to an oxidizing atmosphere. These procedures are appropriate for thermocouple calibrations at temperatures above 800 °C (1472 °F).

1.2 The calibration method is applicable to the following thermocouple assemblies:

1.2.1 *Type 1*—Bare-wire thermocouple assemblies in which vacuum or an inert or reducing gas is the only electrical insulating medium between the thermoelements.

1.2.2 *Type 2*—Assemblies in which loose fitting ceramic insulating pieces, such as single-bore or double-bore tubes, are placed over the thermoelements.

1.2.3 *Type 2A*—Assemblies in which loose fitting ceramic insulating pieces, such as single-bore or double-bore tubes, are placed over the thermoelements, permanently enclosed and sealed in a loose fitting metal or ceramic tube.

1.2.4 *Type 3*—Swaged assemblies in which a refractory insulating powder is compressed around the thermoelements and encased in a thin-walled tube or sheath made of a high melting point metal or alloy.

1.2.5 *Type 4*—Thermocouple assemblies in which one thermoelement is in the shape of a closed-end protection tube and the other thermoelement is a solid wire or rod that is coaxially supported inside the closed-end tube. The space between the two thermoelements can be filled with an inert or reducing gas, or with ceramic insulating materials, or kept under vacuum.

1.3 *This standard does not purport to address all of the safety concerns, if any, associated with its use. It is the responsibility of the user of this standard to establish appropriate safety and health practices and determine the applicability of regulatory limitations prior to use.*

2. Referenced Documents

2.1 *ASTM Standards:*

E 344 Terminology Relating to Thermometry and Hydrometry[2]

E 563 Practice for Preparation and Use of Freezing Point Reference Baths[2]

E 988 Temperature-Electromotive Force (EMF) Tables for Tungsten-Rhenium Thermocouples[2]

E 1256 Test Methods for Radiation Thermometers (Single Waveband Type)[2]

E 1751 Guide for Temperature Electromotive Force (EMF) Tables for Non-Letter Designated Thermocouple Combinations[2]

3. Terminology

3.1 *Definitions:*

3.1.1 For definitions of terms used in this test method see Terminology E 344.

3.1.2 *radiation thermometer*, *n*—radiometer calibrated to indicate the temperature of a blackbody.

3.1.2.1 *Discussion*—Radiation thermometers include instruments having the following or similar names: (*1*) optical radiation thermometer, (*2*) photoelectric pyrometer, (*3*) single wavelength automatic thermometer, (*4*) disappearing filament pyrometer, (*5*) dual wavelength pyrometer or ratio radiation thermometer, (*6*) visual optical thermometer, (*7*) infrared thermometer, (*8*) infrared pyrometer, and permutations on the terms above as well as some manufacturer-specific names.

3.2 *Definitions of Terms Specific to This Standard:*

3.2.1 *automatic radiation thermometer*, *n*—radiation thermometer whose temperature reading is determined by electronic means.

3.2.2 *disappearing filament pyrometer*, *n*—radiation thermometer that requires an observer to match visually the brightness of a heated filament mounted inside the radiation thermometer to that of the measured object.

3.2.3 *equalizing block*, *n*—object, usually metal, that when placed in a nonuniform temperature region, has greater temperature uniformity (due to its relatively high thermoconductivity and mass) than the medium surrounding the object.

3.2.4 *spectral emissivity*, *n*—ratio of the spectral radiance at a point on a particular specimen and in a particular direction from that point to that emitted by a blackbody at the same temperature.

---

[1] This test method is under the jurisdiction of ASTM Committee E-20 on Temperature Measurementand is the direct responsibility of Subcommittee E20.04 on Thermocouples.

Current edition approved Nov. 10, 1997. Published May 1998. Originally published as E 452 – 72. Last previous edition E 452 – 89.

[2] *Annual Book of ASTM Standards*, Vol 14.03.

3.2.5 *spectral radiance*, *n*—power radiated by a specimen in a particular direction, per unit wavelength, per unit projected area of the specimen, and per unit solid angle.

3.2.6 *spectral response*, *n*—signal detected by a radiometer at a particular wavelength of incident radiation, per unit power of incident radiation.

3.2.7 *test thermocouple*, *n*—thermocouple that is to have its temperature-emf relationship determined by reference to a temperature standard.

3.2.8 *thermocouple calibration point*, *n*—temperature, established by a standard, at which the emf developed by a thermocouple is determined.

4. Summary of Test Method

4.1 The thermocouple is calibrated by determining the temperature of its measuring junction with a radiation thermometer and recording the emf of the thermocouple at that temperature. The measuring junction of the thermocouple is placed in an equalizing block containing a cavity which approximates blackbody conditions. The radiation thermometer is sighted on the cavity in the equalizing block and the blackbody temperature or true temperature of the block, including the measuring junction, is determined.

4.2 Since the spectral emissivity of the radiation emanating from a properly designed blackbody is considered unity (one) for all practical purposes, no spectral emissivity corrections need be applied to optical pyrometer determinations of the blackbody temperature.

4.3 Although the use of a radiation thermometer (Note 1) is less may require more effort and more complex apparatus to achieve a sensitivity equivalent to that of commonly used thermocouples, a radiation thermometer has the advantage of being physically separated from the test assembly; thus, its calibration is not influenced by the temperatures and atmospheres in the test chamber. By comparison, a standard thermocouple that is used to calibrate another thermocouple must be subjected to the temperatures at which the calibrations are performed and in some cases must be exposed to the environment that is common to the test thermocouple. If a standard thermocouple is exposed to high temperatures or contaminating environments, or both, for long periods of time, its calibration becomes questionable and the uncertainty in the bias of the calibration increases.

NOTE 1—Disappearing filament pyrometers are somewhat less sensitive than many of the thermocouples used above 800 °C (1472 °F). The advantages of physical separation of the disappearing filament pyrometer from the test assembly may still justify its use over use of a standard thermocouple.

5. Significance and Use

5.1 This test method is intended to be used by wire producers and thermocouple manufacturers for certification of refractory metal thermocouples. It is intended to provide a consistent method for calibration of refractory metal thermocouples referenced to a calibrated radiation thermometer. Uncertainty in calibration and operation of the radiation thermometer, and proper construction and use of the test furnace are of primary importance.

5.2 Calibration establishes the temperature-emf relationship for a particular thermocouple under a specific temperature and chemical environment. However, during high temperature calibration or application at elevated temperatures in vacuum, oxidizing, reducing or contaminating environments, and depending on temperature distribution, local irreversible changes may occur in the Seebeck Coefficient of one or both thermoelements. If the introduced inhomogeneities are significant, the emf from the thermocouple will depend on the distribution of temperature between the measuring and reference junctions.

5.3 At high temperatures, the accuracy of refractory metal thermocouples may be limited by electrical shunting errors through the ceramic insulators of the thermocouple assembly. This effect may be reduced by careful choice of the insulator material, but above approximately 2100 °C, the electrical shunting errors may be significant even for the best insulators available.

6. Sources of Error

6.1 The most prevalent sources of error (Note 2) in this method of calibration are: (*1*) improper design of the blackbody enclosure, (*2*) severe temperature gradients in the vicinity of the blackbody enclosure, (*3*) heat conduction losses along the thermoelements, and (*4*) improper alignment of the radiation thermometer with respect to the blackbody cavity and unaccounted transmission losses along the optical path of the radiation thermometer.

NOTE 2—These are exclusive of any errors that are made in the radiation thermometer measurements or the thermocouple-emf measurements.

7. Apparatus

7.1 *Furnace*:

7.1.1 The calibration furnace should be designed so that any temperature within the desired calibration temperature range can be maintained constant within a maximum change of 1 °C (1.8 °F) per minute in the equalizing block over the period of any observation. Figs. 1-3 show three types of furnaces **(1 and 2)**[3] that can be used for calibrating refractory-metal thermocouples. Fig. 4 is a detailed drawing of the upper section of the furnace in Fig. 3. An equalizing block containing a blackbody cavity is suspended in the central region of the furnace by means of support rods or wires. The mass of the support rods or wires should be kept to a minimum to reduce heat losses by conduction. When the furnace is in operation, a sufficiently large region in the center of the furnace should be at a uniform temperature to ensure that the temperature throughout the equalizing block (when all test thermocouple assemblies are in position in the block) is uniform. At temperatures greater than 2000 °C, furnace parts made from tantalum may introduce contamination of exposed thermoelements. In this case, it may be desirable to fabricate heated furnace components from tungsten.

7.1.2 The blackbody cavity in the equalizing block should be designed in accordance with established criteria set forth in the literature **(4-8).** Such factors as interior surface texture,

---

[3] The boldface numbers in parentheses refer to the list of references at the end of this standard.

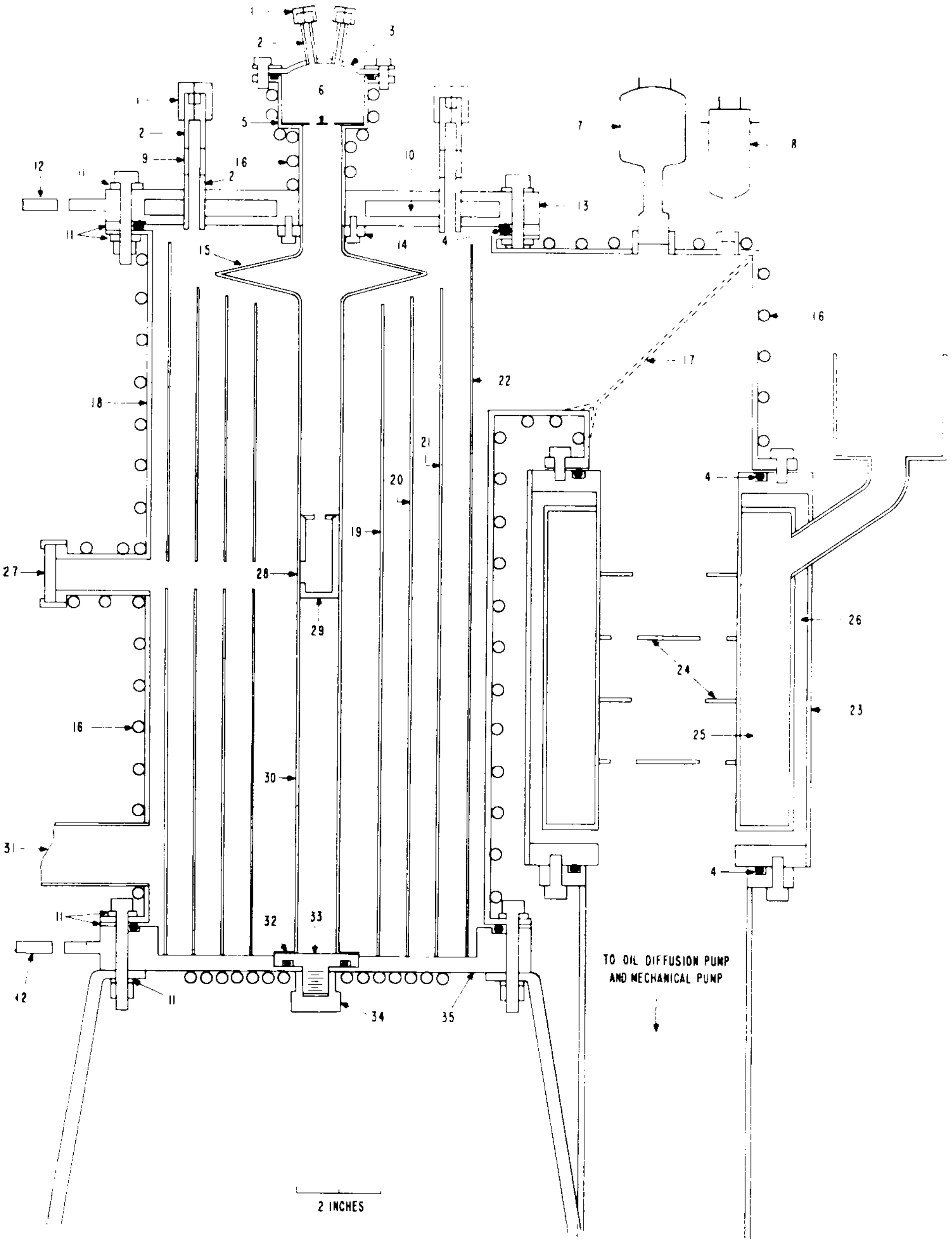

1. Caps for making vacuum tight seals around the thermoelements. A cylinder type neoprene gasket is compressed around the thermoelements.
2. Kovar metal tube.
3. Dome made of No. 7052 glass providing electrical insulation for thermoelements.
4. Neoprene O-ring gasket.
5. Top plate extension (brass).
6. Aluminum oxide radiation shield.
7. Ionization vacuum gage.
8. Thermocouple vacuum gage.
9. No. 7052 glass tube providing electrical insulation for thermoelements.
10. Chamber for water flow during furnace operation.
11. Electrically insulating spacers.
12. Power supply terminal.
13. Removable top plate (brass).
14. Tantalum spacing ring providing electrical contact between plate and tantalum tube.
15. Thermal expansion joint of tantalum tube.
16. Copper tubing for water cooling.
17. Auxiliary radiation shield.
18. Furnace shell (brass).
19. First radiation shield. 0.020-in. (0.51-mm) tantalum sheet rolled into a cylinder and secured with tantalum rivets.
20. Second radiation shield. (0.020-in. (0.51-mm) molybdenum.)
21. Third radiation solid. (0.020-in. (0.51-mm) molybdenum.)
22. Fourth radiation shield. (0.010-in. (0.25-mm) molybdenum.)
23. Liquid nitrogen trap.
24. Metal baffle plates at liquid nitrogen temperature.
25. Liquid nitrogen chamber.
26. Vacuum chamber.
27. Borosilicate glass window.
28. Hole (0.045-in. (1.14-mm) diameter) for sighting with disappearing filament pyrometer.
29. Molybdenum blackbody.
30. Tantalum tube.
31. Inert gas entrance.
32. Tantalum rings for electrical contact.
33. Removable copper plate for electrical contact.
34. Hex-head nut for tightening copper plate against O-ring gasket.
35. Bottom plate (brass).

FIG. 1 High-Temperature Furnace (Example 1)

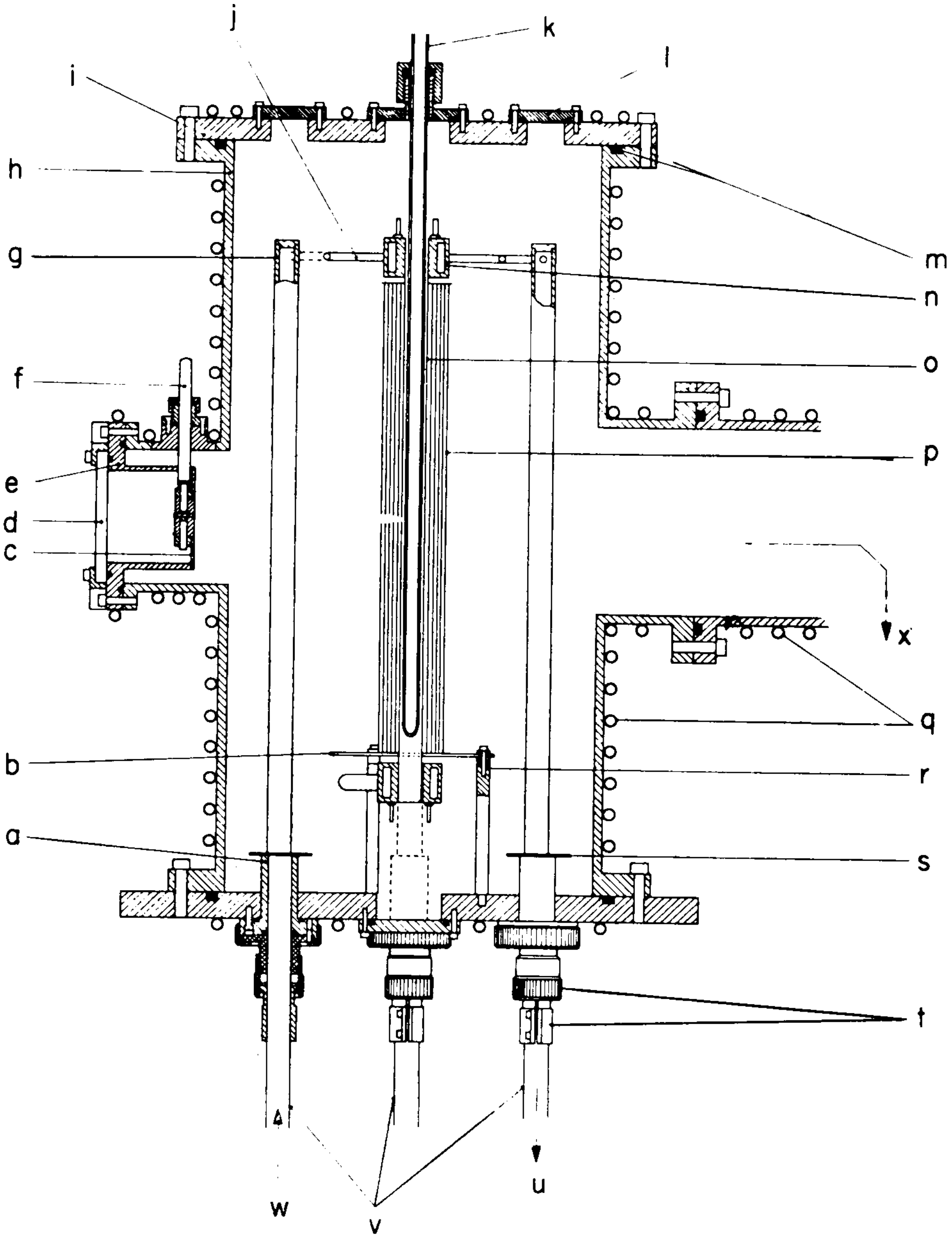

(*a*) Nylon bushing, (*b*) stainless steel support, (*c*) rectangular stainless steel shutter, (*d*) borosilicate glass window, (*e*) brass shutter support, (*f*) shutter rotation mechanism, (*g*) copper lead, (*h*) steel housing, (*i*) brass plate, (*j*) copper coil spring, (*k*) alumina closed-end tube, (*l*) port, (*m*) O-ring gaskets, (*n*) copper water-cooled electrode, (*o*) tantalum heater element, (*p*) tantalum radiation shields, (*q*) water-cooling coils, (*r*) ceramic insulator, (*s*) tantalum radiation shield, (*t*) adjustable clamp, (*u*) water out, (*v*) electrical leads, (*w*) water in, and (*x*) to vacuum system.

FIG. 2 High-Temperature Furnace (Example 2)

diameter-to-depth ratio of the blackbody cavity opening, and internal geometry can have an appreciable effect on the spectral emissivity of the cavity.

7.1.3 Figs. 5-7 show three typical equalizing block designs that are used in thermocouple calibrating furnaces. The design in Fig. 5 is used in furnaces where the standard radiation thermometer is sighted horizontally into the blackbody through the hole in the side of the block. This design is particularly useful in the calibration of bare-wire thermocouples since the lid on the blackbody (or the entire blackbody) can be an electrically insulating material such ashafnium oxide or beryllium oxide. Thus, if the bare thermocouple wires should come in contact with the equalizing block, the wires will not be electrically shorted. If this design is used in the calibration of Types, 2, 3, or 4 thermocouple assemblies (see 1.2), the blackbody lid can be metal since electrical insulation between the thermoelements is included as part of the assembly.

NOTE 3—**Warning:** Beryllium oxide should be considered a hazardous material. Material Safety Data Sheets and precautions in handling this toxic substance should be obtained from the supplier.

7.1.4 The designs in Figs. 6 and 7 are used in furnaces where the standard radiation thermometer is sighted vertically into the blackbody cavity. In cases where it is necessary to calibrate a number of thermocouples during one calibration run or to calibrate thermocouple assemblies that are large in

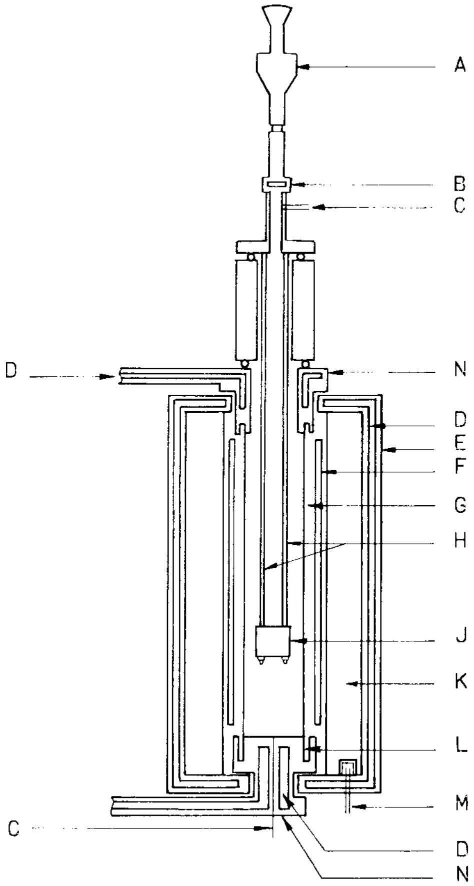

(*A*)	Disappearing filament pyrometer
(*B*)	Sight window
(*C*)	Gas inlet
(*D*)	Water cooling
(*E*)	Stainless steel shell
(*F*)	Tungsten heat shield
(*G*)	Tungsten heater
(*H*)	Support rods
(*J*)	Equalizer block (blackbody)
(*K*)	Refractory brick
(*L*)	Gallium alloy electrical contact
(*M*)	Gas outlet
(*N*)	Copper electrode

FIG. 3 High-Temperature Furnace (Example 3)

diameter and mass, the equalizing block designs in Figs. 6 and 7 are appropriate. If the thermocouple assemblies being tested in these types of equalizing blocks are massive and can conduct a considerable amount of heat away from the block, the blackbody cavity and the thermocouple wells should be of sufficient depth to ensure that the thermocouple measuring junctions and a considerable length of the thermocouple assemblies leading from the measuring junctions are contained in the wall of the equalizing block.

7.1.5 In order to view the radiation emanating from the blackbody cavity, some type of window shall be contained in the outer structure of the furnace. It is important that this window be properly designed to ensure that errors are not encountered when the blackbody radiation is observed with a radiation thermometer. Windows may be made from any transparent glass or crystalline material of high optical quality.

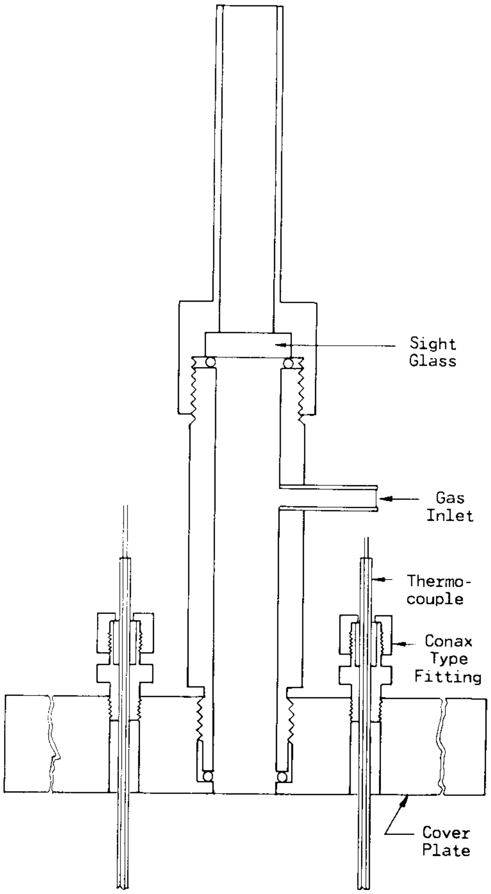

FIG. 4 Upper Section of Furnace (Example 3)

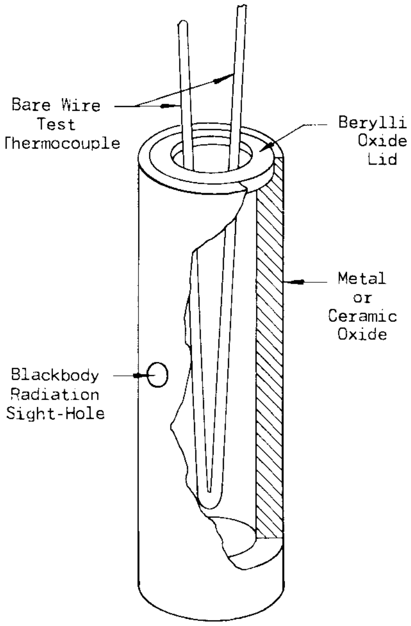

FIG. 5 Equalizing Block (Example A)

7.1.6 Figs. 8 and 9 show an incorrectly designed furnace window and a correctly designed window, respectively. In Fig. 8 the blackbody radiation emanating from the window does not completely fill the objective lens of the radiation thermometer. This is caused by the window opening being too small in

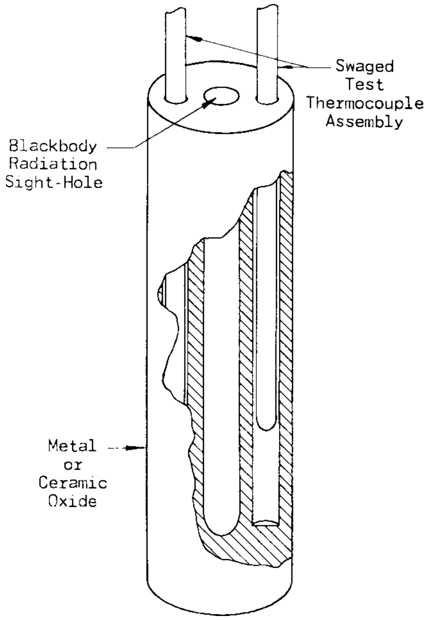

FIG. 6 Equalizing Block (Example B)

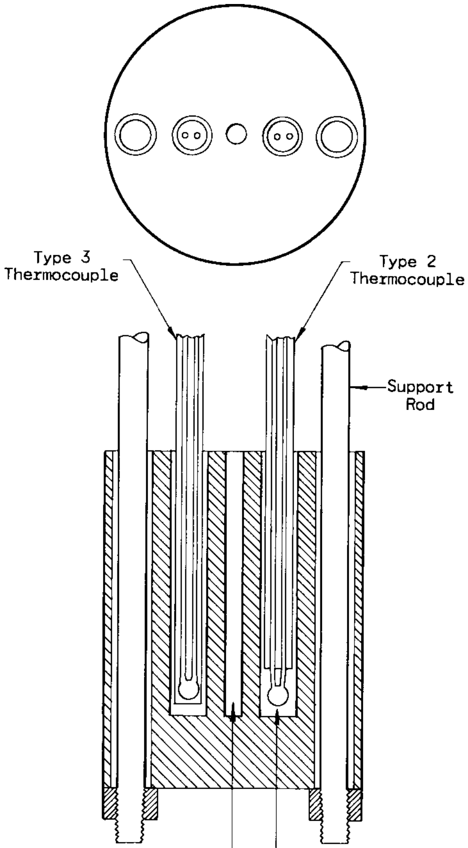

FIG. 7 Equalizing Block (Example C)

diameter and thus acting as an aperture stop. In this case, the temperature indicated by the radiation thermometer may be lower than the temperature indicated if all of the objective lens is filled with the cone of radiation. Fig. 9 shows a larger window opening with the resulting cone of radiation completely filling the objective lens. It also can be seen that the openings in the radiation shields can act as aperture stops if they are too small in diameter. This may cause the same type of error as described with the window opening. On the other hand, if the window and the radiation shield openings are made too large, radiation losses may produce appreciable temperature gradients in the hot zone of the furnace.

7.1.7 The transmission losses of the window should be determined at all calibration temperatures and the appropriate corrections applied to all radiation thermometer readings (see 8.3).

7.1.8 Figs. 10 and 11 show two types of vacuum seals (Note 4) that can be used to bring test thermocouple assemblies into the furnace chamber. The seal shown in Fig. 10 is particularly useful for bringing bare-wire thermocouples into the furnace. This design makes use of a cylinder-shaped fluorocarbon gasket that is compressed around the thermocouple wires to form a vacuum tight seal. A small amount of high-temperature vacuum grease should be placed on each gasket before sealing. The thermocouple wires are inserted through a coaxial hole in the gasket. Also, this design can be used to form a seal around the outer sheath of swaged thermocouple assemblies (Type 3 of 1.2).

NOTE 4—If the calibration furnace design is such that the desired furnace atmosphere is obtained by purging (see 8.2), vacuum seals are not needed to maintain a relatively pure furnace atmosphere.

7.1.9 The seal shown in Fig. 11 can be used in arrangements where many test thermocouples are inserted and removed from the furnace chamber over a short period of time. This design allows the test thermocouple to be quickly attached to or detached from extension wires that are permanently sealed in the metal-to-glass sealing unit. When a test thermocouple is to be removed from the furnace, the O-ring gasket seal (Seal A) is broken and the top section of the seal is lifted upward, thus lifting the attached test thermocouple out of the furnace.

7.1.10 A metal clamp (*B*) containing a small screw is used to make a mechanical connection between the test thermocouple and the extension wires. Care should be taken to eliminate any temperature gradients that might exist along the metal clamps during furnace operation. Such gradients can cause extraneous emfs in the measuring circuit.

7.1.11 Fig. 12 shows the same type of seal as Fig. 10 but with a Type 2 thermocouple suspended into the test furnace instead of a Type 1. Fig. 13 shows a vacuum seal design that can be used to bring Type 3 or 4 thermocouple assemblies into the furnace.

7.1.12 In general, any sealing unit that is used to bring thermocouple assemblies into a furnace chamber should (*1*) allow the thermocouple assembly to be easily installed or removed from the furnace, (*2*) electrically insulate the thermoelements from each other and from any part of the furnace that is connected electrically to the furnace power supply, (*3*) not cause any physical or chemical changes in the thermoelements, and (*4*) not introduce any extraneous emfs in the thermocouple-emf measuring circuit.

7.2 *Radiation Thermometer*:

7.2.1 A well characterized and stable radiation thermometer, with a calibration of known uncertainty, is used as the standard

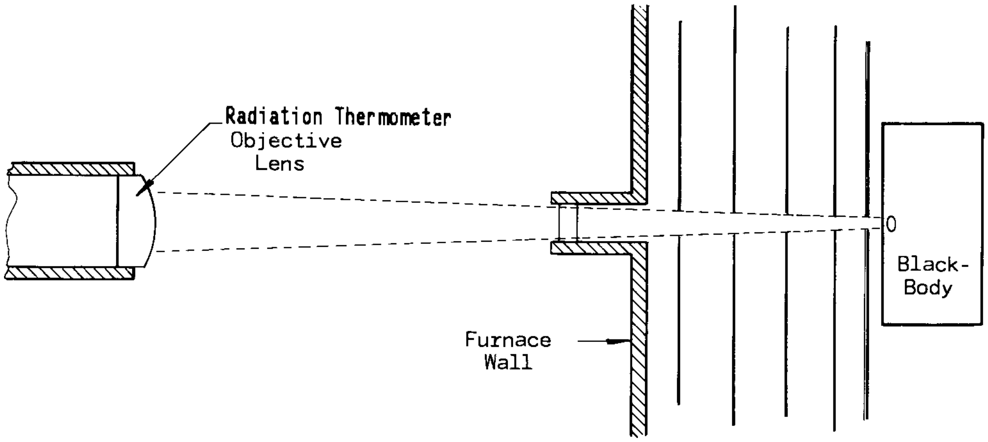

FIG. 8 Furnace Window (Incorrect Design)

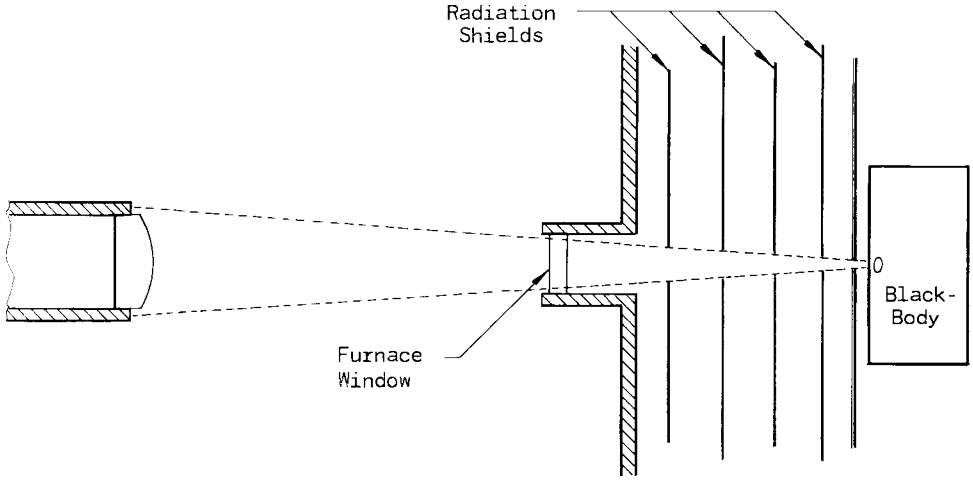

NOTE 1—It should be recognized that errors resulting from incorrect furnace window design may be more significant for single wavelength automatic radiation thermometers than either disappearing filament pyrometers or dual wavelength radiation thermometers.

FIG. 9 Furnace Window (Correct Design)

instrument for determining temperatures in this test method. The radiation thermometer can be either the disappearing filament type or the automatic type, depending on the accuracy required for a specific test. (See Table 1 for calibration uncertainties.) Both types of radiation thermometers are available commercially. If something other than a disappearing filament pyrometer is used, it shall have an operating wavelength less than or equal to 1.1 µm and meet both the temperature measurement and sighting field of view requirements of the calibration apparatus. (Refer to Test Method E 1256 for methods to determine the target characteristics of an automatic radiation thermometer in addition to the sighting cautions illustrated in Figs. 8 and 9 herein.) For radiation thermometers with significant spectral response at wavelengths that differ by more than 40 nm from the center wavelength of the instrument, significant errors may be introduced if the calibration of the radiation thermometer was not performed with a blackbody source or if the emissivity of the blackbody used either in the calibration or in this test method depends on the detected wavelength.

7.2.2 In using a disappearing filament pyrometer in this method, an observer varies the brightness of the standard source (usually a small tungsten filament lamp in the pyrometer) until it matches the brightness of the radiation emanating from the blackbody cavity (Fig. 14). After the match has been made, the corresponding temperature can be determined by either of two methods: (*1*) the temperature can be read directly from a meter that is connected to the pyrometer circuit, or (*2*) the current through the pyrometer filament lamp can be measured through the use of a standard resistor and a potentiometer or a digital voltmeter.

7.2.3 If the meter-indication method is used, the initial calibration of the disappearing filament pyrometer shall be on a meter-indication versus temperature basis. Likewise, the pyrometer shall be calibrated on current versus temperature basis if the current measuring method is to be used.

7.2.4 In general, a smaller uncertainty can be obtained with a disappearing filament pyrometer that has been calibrated and used on the current-measurement basis as opposed to the meter-indication method. This difference is due mainly to the inability of the observer to read the meter scale to less than 1 °C and to the accuracy of the meter itself.

7.2.5 Certain automatic radiation thermometers utilize an internal filament lamp as a spectral radiance reference, and the

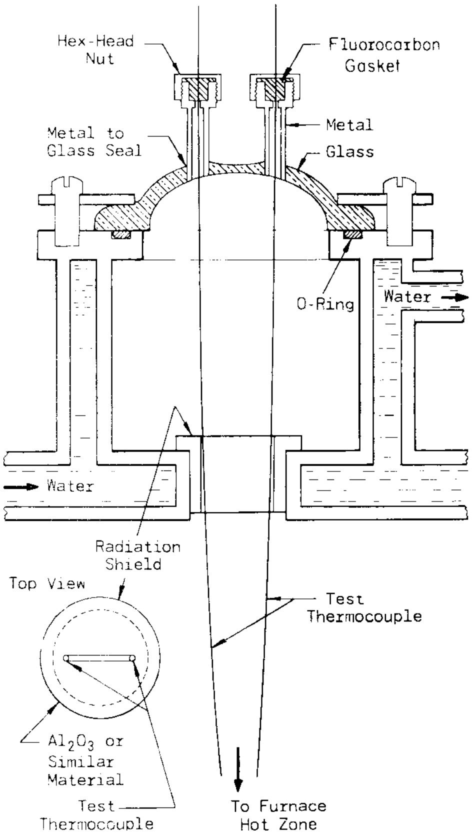

FIG. 10 Vacuum Seal (Example 1)

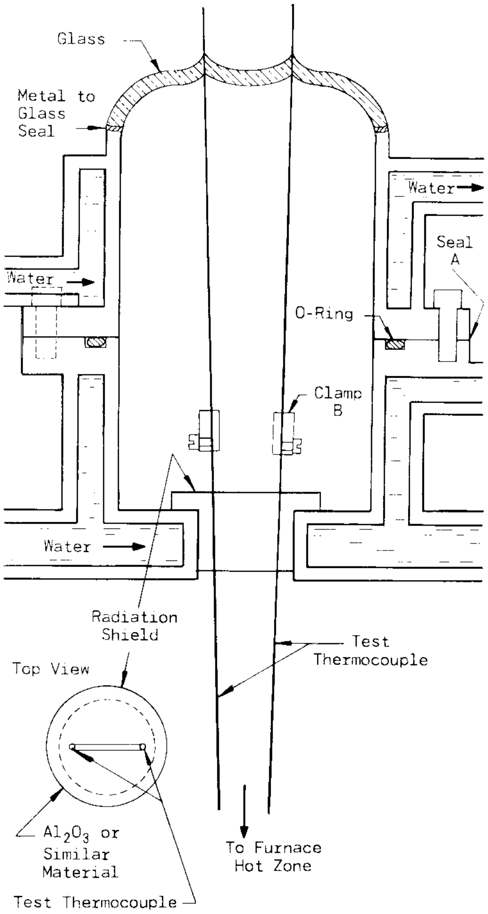

FIG. 11 Vacuum Seal (Example 2)

comparison between the brightness of the radiation emanating from the blackbody cavity and the brightness of the radiation thermometer lamp filament is made automatically by components in the radiation thermometer. In this case, either of the methods for relating the lamp current and temperature mentioned in 7.2.2 can be applied. Most radiation thermometers of this type are designed to compare the brightness of the target source (in this case the radiation from the blackbody cavity) and the radiation thermometer filament lamp many times each second. If the radiation thermometer detects a slight increase or decrease in the temperature of the blackbody radiation, an electronic balancing system automatically increases or decreases the temperature of the radiation thermometer lamp until it has the same apparent brightness temperature as the blackbody radiation. Thus, the brightness of the radiation thermometer lamp filament is maintained continuously at the same apparent brightness temperature as the blackbody. If the radiation thermometer lamp and a standard resistor are connected in series, the voltage drop across the resistor can be measured by means of a digital voltmeter or a potentiometer.

7.2.6 If an automatic radiation thermometer is used, the radiance emitted from the cavity is measured automatically and displayed as temperature, usually on a digital temperature display in modern instruments (Note 5). Great care shall be taken to ensure that the optical measuring axis is aligned to be coaxial with the centerline of the blackbody-radiation shield assembly and that the sighting path of the thermometer is not blocked anywhere along its length. Since this sighting path is so important, it is equally important that the user have a detailed knowledge of the sighting“ cone” of the thermometer to be certain that it can be aligned with the apparatus. This requires a set of measurements along the sighting path of the thermometer to accurately determine the size and shape of the cone. Test Method E 1256 provides a description of a method of determining the target size at the focal distances of the thermometer and is readily adapted for determining the target size at distances between the entrance aperture of the thermometer and the target distance by merely changing the distance used.

NOTE 5—If the radiation thermometer has an emissivity compensation control, it should be set at 1.0 for the purposes of this test method, because the corrections for the sighting window are conducted in a manner that eliminates any additional error from the emissivity setting control or the actual internal emissivity compensation. The window correction method is described in 8.3.

7.2.7 Details concerning the calibration and use of radiation thermometers can be found in Refs **(8-11)**.

7.3 *Reference Junctions*—Most thermocouple calibrations are performed with the reference junctions of the thermocouples maintained at 0 °C. Likewise, most standard tables (or reference tables) for thermocouples are presented with a reference junction temperature of 0 °C. For these reasons, a reference junction temperature of 0 °C is recommended for this test method. The reference junction temperature should be controlled closely enough to eliminate variations in it as a significant source of error. A simple and relatively trouble-free

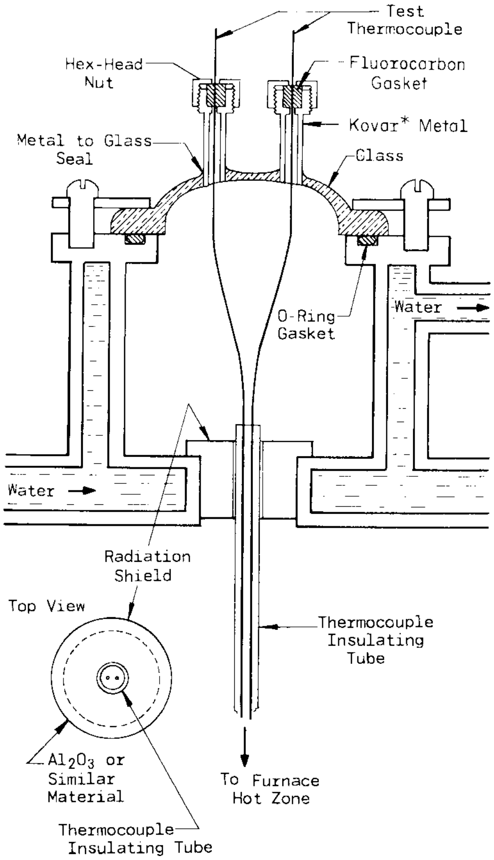

* Kovar is a registered trademark of CRS Holdings, Inc., a subsidiary of Carpenter Technology Corporation.

FIG. 12 Vacuum Seal (Example 1 with Type 2 Thermocouple)

method of maintaining the reference junction of a thermocouple at 0 °C is through the use of reasonably pure crushed ice and water. An acceptable method utilizing crushed ice and water to maintain a 0 °C reference temperature is given in Practice E 563.

7.4 *Potentiometers or Voltmeters*—The choice of a specific potentiometer or voltmeter will depend upon the required accuracy of the calibration being performed, but generally the instrument will be chosen from commercially available laboratory high-precision types with emf ranges suitable for use with thermocouples. Potentiometers and voltmeters require periodic calibrations with documented uncertainty by a qualified laboratory.

7.5 *Connecting-Wire Assembly*:

7.5.1 Connecting wires from the reference junction to the potentiometer or voltmeter should be of insulated copper and should be run in a grounded conduit or shielded cable if long leads subject to electrical pickup are involved.

7.5.2 Selector switches may be used to switch between different thermocouples being calibrated. Such switches should be of rugged construction and designed so that both connecting wires are switched when switching from one thermocouple to the next, leaving thermocouples not in use entirely disconnected from the potentiometer or voltmeter. The switches should be constructed with copper contacts, connections, and terminals to preserve the all-copper circuit from the reference junction to the potentiometer or voltmeter. Silver or gold contact switches can be used in place of copper switches since the thermal emf difference between these three metals at or near room temperature is negligibly small. Precautions should be taken to protect the switches from temperature fluctuations due to air currents or radiation from hot sources.

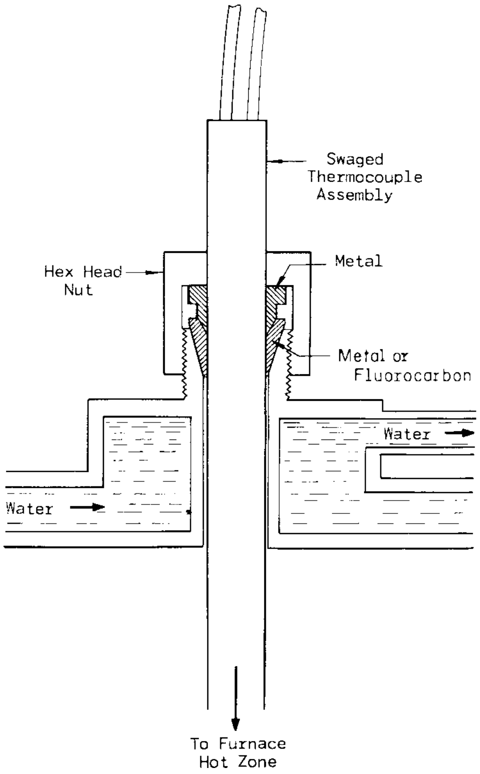

FIG. 13 Vacuum Seal (Example 1) with Type 3 or 4 Thermocouple Assemblies

7.5.3 Terminal blocks may be used in the connecting circuit, if convenient, but they should be provided with copper binding posts and should be protected against the development of temperature gradients in the blocks.

7.5.4 Selector switches and terminal blocks should always be placed in the thermocouple measuring circuit between the reference junctions and the potentiometer or voltmeter and not between the measuring junction and the reference junctions.

8. Preparation of Apparatus

8.1 *Thermocouple Assemblies*—If the test thermocouple is a Type 1 or 2 assembly, the sealing units shown in Figs. 10 and 11, or Fig. 12, can be used to seal it in the furnace chamber. Type 3 and 4 assemblies may be sealed by using the unit shown in Fig. 13. The test thermocouple shall be positioned in the sealing unit so that when the thermocouple is inserted in the furnace, the measuring junction will be positioned in the equalizing block as shown in Figs. 5 and 6, or Fig. 7. After the test thermocouple is properly positioned, the sealing unit is made vacuum tight (if necessary) with respect to the furnace chamber.

8.2 *Furnace Atmospheres or Vacuum Conditions*:

8.2.1 The thermocouples covered by this test method shall be calibrated in an inert or reducing atmosphere or in a vacuum. To prepare for these test conditions, first clear the

TABLE 1 Estimated Maximum Uncertainties at Calibration Points and of Interpolated Points for Refractory Metal Thermocouples

NOTE 1—The maximum uncertainties stated apply only when the thermocouples are calibrated in accordance with this method and the person uses reasonable care and scientific knowledge in any general procedures not mentioned in this method.

Using a Disappearing Filament Pyrometer		Using an Automatic Radiation Thermometer	
Calibration Points °C[A]	Interpolated Values, °C[B]	Calibration Points, °C[A]	Interpolated Values, °C[B]
800 to 1400 ± 3.0	800 to 1400 ± 3.5	800 to 1400 ± 2.0	800 to 1400 ± 2.5
1400 to 2000 ± 6.0	1400 to 2400 ± 6.5	1400 to 2000 ± 4.0	1400 to 2000 ± 4.5
2000 to 2800 ± 10.0	2000 to 2800 ± 11	2000 to 2800 ± 7.0	2000 to 2800 ± 8.0

[A] The calibration points should be taken at approximately 200° intervals in the temperature ranges indicated.

[B] Uncertainties for interpolated values apply only when a minimum of six calibration points are taken and the desired interpolated temperature is within the range of the temperature values of the calibration points.

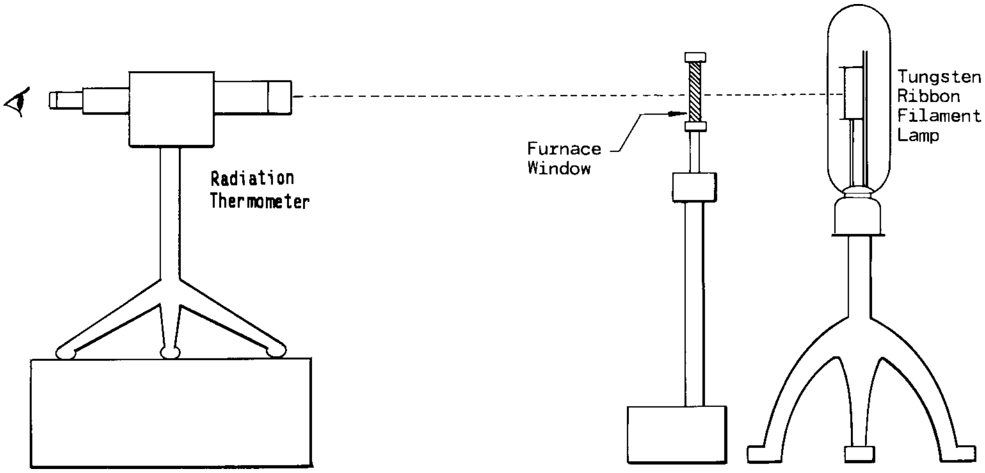

FIG. 14 Determination of Transmission Correction for Furnace Window

furnace chamber of all atmospheric gases, such as oxygen, nitrogen, carbon dioxide, carbon monoxide, and water vapor. If the calibration is to be performed in a gaseous medium, remove contaminating gases by purging the furnace with several volumes of inert or reducing gas, or both, such as that used during calibration, or by evacuation. If the furnace chamber is to be evacuated and it contains relatively large amounts of water vapor, the removal of the water vapor will be greatly accelerated if a liquid nitrogen trap is included in the vacuum pumping system. A vacuum of 0.01 Pa or better shall be obtained. Because refractory metal wires are sintered and slightly porous, the thermoelements themselves may be the source of any observed vacuum leaks. If it is desired to calibrate the thermocouples in an inert or reducing atmosphere, release the gas into the furnace chamber after the vacuum pumping system has been closed off by means of a vacuum valve. Flush the furnace chamber several times with the gas before the vacuum pumping system is closed off. This helps to reduce the level of gas impurities in the furnace chamber. If a particular thermocouple assembly exhibits appreciable outgassing at high temperatures (this may be particularly true of a Type 2 thermocouple assembly) or if it is known that certain furnace parts will outgas at high temperatures, the inert gas shall flow through the furnace chamber during the complete calibration run. This is best accomplished by filling the chamber to a slight over-pressure (above normal atmospheric pressure) and then allowing the gas to flow through the chamber at a slow rate. Keep the flow of gas through the furnace chamber at a minimum rate to eliminate convection currents between the hot zone and the cooler zones in the furnace. Such convection currents can cause large fluctuations in the emf of the test thermocouples. If a continuous inert gas flow is not needed during a particular calibration run, release the gas into the chamber until the desirable partial pressure or over-pressure is obtained and then completely seal the chamber by closing all vacuum valves.

8.2.2 If the inert or reducing gas contains relatively large percentages of impurities, these impurities can cause appreciable changes or drifts in the thermocouple emf. Therefore, any inert or reducing gas used in the furnace during calibration shall have a purity of at least 99.999 %. Water vapor impurities may be removed from the gas by the use of a liquid nitrogen trapping system or other gas purification system.

8.2.3 If a thermocouple calibration is desired under vacuum conditions, any back-streaming of oil vapors from the vacuum pumping system into the furnace chamber shall be minimized. A properly designed liquid nitrogen trapping system is effective in reducing oil vapor backstreaming. Keep the liquid nitrogen trap in continuous operation during the initial pump-down of the furnace chamber and also during the complete calibration run. A vacuum calibration shall not be performed with the vacuum pumping system closed off from the furnace chamber. If a calibration is performed in a closed system under vacuum, contaminating products from outgassing and high-temperature vaporization are released in the furnace chamber. These products can react with the test thermocouple and cause a change or drift in its emf output.

8.3 *Transmission Corrections for Furnace Window*:

8.3.1 The transmission corrections (*A* value), in degrees Celsius or Fahrenheit, of the window in the calibration furnace shall be determined. The corrections may be determined at a set of specified temperatures by using a calibrated radiation thermometer and a thermal radiation source that can be controlled and stabilized, and by following the procedure described in 8.3.2-8.3.2.4. Alternately, the spectral response of the radiation thermometer and the spectraltransmission of the window may be measured directly, and a suitable mathematical model may be used to calculate the transmission corrections. Once the transmission corrections for the window have been determined, apply them to all radiation thermometer readings that are made in temperature determinations of the blackbody in the furnace. The transmission corrections can be applied during the compiling of data, after the calibration run has been completed.

8.3.2 If, for example, one wishes to determine the *A* value of a particular window over the temperature range 800 °C to 2300 °C (1472 °F to 4172 °F), take the following steps:

8.3.2.1 Sight the radiation thermometer on a radiation source that has been stabilized at a temperature between 1000 °C and 1200 °C (1832 °F and 2192 °F). This source can be a tungsten ribbon filament lamp. The temperature of the source shall not fluctuate by more than a total of 5 °C (9 °F) over a 10-min interval. The distance between the radiation source and the radiation thermometer shall be approximately the same as the distance between the furnace blackbody cavity and the radiation thermometer when actual temperature measurements are being made during furnace operation.

8.3.2.2 Take three pairs of readings with the radiation thermometer, the first reading of each pair being a reading of the source brightness temperature *without* the window in the radiation thermometer line-of-sight and the second reading of each pair *with* the window in the line-of-sight (Fig. 14). Calculate the average of the three readings *without* the window in the line-of-sight. Call this average temperature T_w. Convert the temperature T_w to an equivalent temperature in kelvins. If T_w is in degrees Celsius, add 273 K to obtain the equivalent kelvin temperature. If T_w is in degrees Fahrenheit, first convert this temperature to degrees Celsius by the following equation:

$$T_C = 5/9\,(T_F - 32) \tag{1}$$

To this temperature add 273 K to obtain the equivalent temperature in kelvins.

8.3.2.3 Follow the procedure in 8.3.2.2 using the three radiation thermometer readings obtained *with* the window in the line-of-sight. Call the average of these three temperatures T_n (in kelvins).

8.3.2.4 Using T_w and T_n the *A* value of the window (as determined at the 1000 °C to 1200 °C temperature) is

$$A = (1/T_n) - (1/T_w) \tag{2}$$

8.3.2.5 Following the procedure in 8.3.2.3, determine the *A* value for the window at a temperature between 1800 °C and 2000 °C (3272 °F and 3632 °F). Since the *A* value for any window is virtually a constant (Note 6) at all temperatures, any significant difference between the *A* values determined at the two selected temperatures represent errors in the experiment. Take an average of the two *A* values obtained above and use this average (A_{avg}) as the *A* value for the window over the temperature range 800 °C to 2300 °C. The *A* value will be a small positive number. By using A_{avg} in the above equation, the correction for the window can be determined at any temperature between 800 °C and 2300 °C. For example, if A_{avg} for the window is 6.0×10^{-6}, then to determine the transmission correction for the window at 1760 °C we would have the following equation:

$$A_{avg} = (1/T_n) - (1/T_w) \tag{3}$$

Substituting, we have the following equation:

$$6.0 \times 10^{-6} = (1/T_n) - [1/(1760 + 273)] \tag{4}$$

$$1/T_n = 4.98 \times 10^{-4}$$

$$T_n = 2008\,K$$

$$= 1735\,°C$$

Thus, the transmission correction for the window at a source brightness temperature of 1760 °C would be 1760 °C– 1735 °C or 25 °C.

NOTE 6—It can be shown mathematically that the *A* value is virtually constant to within the precision required for this test method. The theory governing this concept is discussed in DeWitt and Nutter **(8)**.

8.3.2.6 As a matter of convenience, the transmission corrections for the window can be calculated at every 100 °C between 800 °C and 2300 °C and then a linear interpolation can be made to obtain a correction at any temperature within the 100 °C intervals.

8.3.2.7 During the experiment to determine the *A* value of a window, always take care to sight the radiation thermometer through the center of the window and not through a portion of the window that is off-center. Likewise, when the window is placed in position in the furnace, always sight the radiation thermometer through the center of the window. The radiation thermometer is properly aligned if an imaginary straight line can be drawn from the center of the blackbody cavity opening to the center of the radiation thermometer objective lens with the line passing through the center of the furnace window. Also, the radiation thermometer shall be oriented so that the cavity opening is centered in the field of view. Check the transmission corrections for the furnace window periodically to determine if the window is being affected by deposits from outgassing or vaporization of materials in the furnace.

9. Procedure

9.1 Immerse the reference junction ends of the test thermocouple (or the extension wires if used) in the reference junction bath. Then make the proper copper wire connections between the reference junction bath and the potentiometer or voltmeter. Begin the heating cycle of the furnace and allow the temperature to increase until enough radiation is emitted from the blackbody cavity to be measured by the radiation thermometer at its lowest calibration value. This will probably be somewhere between 750 °C and 805 °C (1382 °F and 1562 °F). Focus the radiation thermometer on the edge of the blackbody cavity opening as precisely as possible. Then, realign the radiation thermometer with the center of the blackbody cavity opening and the center of the furnace window opening. The method of using the imaginary line extending from the center of the blackbody cavity opening, through the center of the furnace window and to the center of the radiation thermometer objective lens can be used to determine proper alignment.

9.2 Increase the temperature of the furnace until the lowest calibration temperature (to within ±10 °C or ±18 °F) is reached. As the furnace temperature increases, it may be necessary to realign the radiation thermometer on the blackbody cavity opening because of thermal expansion of internal furnace parts. Using the test thermocouple as a detector, adjust the power controls to the furnace until the furnace temperature is not changing by more than 1 °C (1.8 °F) per minute. It will be necessary to know the approximate Seebeck coefficient of the test thermocouple at each calibration point in order to determine whether the furnace temperature is changing by more than the specified rate. Although the furnace temperature may be stable to within the specified rate (as determined by the radiation thermometer), it is possible that the rate of change of the test thermocouple indicated temperature is more than 1 °C (1.8 °F) per minute. If this is the case, it is quite likely that the test thermocouple is undergoing physical or chemical changes with resulting changes in emf. These changes may be temporary and will diminish with time. If these effects do not tend to diminish, do not continue the thermocouple calibration.

9.3 Determine the temperature of the blackbody cavity in the equalizing block with the radiation thermometer and record this reading. Then read and record the emf of the test thermocouple, followed by another radiation thermometer reading. Under stable or near-stable conditions, the emf reading of the test thermocouple will correspond to a temperature represented by an average of the two radiation thermometer readings. Take a second series of readings resulting in a second value of emf for the test thermocouple at nearly the same temperature. Because of small variations of furnace temperature, it is unlikely that the two emf readings of the test thermocouple will have been made at exactly the same temperature. Correct one emf reading to the temperature of the second, and average the two values of emf corresponding to the second temperature. Using the reference tables in Tables E 988 or Guide E 1751, corrections can be applied for temperature differences up to 20 °C (36 °F) without introducing an error greater than the equivalent of 0.1 °C (0.2 °F). Repeat this procedure for each calibration point.

10. Calculation

10.1 Having determined the emf of the thermocouple at a number of calibration points, complete the calibration by interpolating between the calibration points. Various interpolation methods may be used to accommodate special circumstances **(12)**. The method involving the use of a difference curve from a reference table is often simplest to use.

10.1.1 To use this method, choose the appropriate reference table in Tables E 988 or E 1751 as a basis for establishing a difference curve.

10.1.2 These table values are based upon a reference temperature of 0 °C (32 °F). If another reference junction temperature is used, the reference tabular values shall be adjusted by subtracting from each value the emf that would be developed by the test thermocouple if its measuring junction were at the reference junction temperature and its reference junction were maintained at 0 °C.

10.1.3 Calculate the emf difference $\Delta E = E_r - E$ for each calibration point, where E_r is the table value of emf and E is the emf of the test thermocouple at the temperature of the calibration point. With values of ΔE along the ordinate and values of E along the abscissa, plot the value of ΔE for each calibration point. Add the value of $\Delta E = 0$ at the reference junction temperature as an additional point on the graph. Determine a smooth curve that passes through all of the points by one of the following means: (a) calculate a mathematical fit of a polynomial function for ΔE by the method of least squares, (b) calculate a mathematical spline fit, or (c) by visual determination draw a smooth curve on the graph. The resulting curve for ΔE as a function of temperature represents the difference curve between the table values of emf and the emf values of the measured thermocouple. At any observed value of E add the corresponding value of ΔE from the curve and enter the table at this corrected value of emf to obtain the true temperature. The values ΔE take the sign of a correction to be added to the observed emf, producing a corrected emf with which one can enter the standard table to get the true temperature.

11. Report

11.1 Report the calibration results in any convenient form. This may be a table of values of E at a number of temperatures T or it may be a table of values of ΔE at selected values of E or T.

12. Uncertainty

12.1 The uncertainty obtained in thermocouple calibrations depends principally upon two factors: (*1*) the uncertainty realized at the calibration points and (*2*) the uncertainty with which interpolation is made.

12.2 *Uncertainty at Calibration Points*:

12.2.1 The uncertainty attained at each calibration point will depend upon (*1*) the uncertainty to which the standard (in this case a radiation thermometer) has been calibrated, (*2*) the uncertainty to which the person making the measurements can determine temperatures with the disappearing filament pyrometer (Note 7), (*3*) the uncertainty to which any radiation losses that occur in the optical path between the blackbody cavity opening and the radiation thermometer can be determined, (*4*) the spectral emissivity of the blackbody cavity (see Refs **(4-8)**), (*5*) whether the measuring junction of the test thermocouple and the blackbody cavity are at the same temperature, and (*6*) the uncertainty to which the emf of the test thermocouple can be measured.

NOTE 7—If an automatic radiation thermometer is used as the standard instrument, the uncertainties caused by operator judgment in the matching of filament and object brightness when making disappearing filament pyrometer measurements are eliminated. The use of an automatic radiation thermometer does not, however, remove other uncertainties associated with this measurement.

12.2.2 The usual uncertainties (95 % confidence level) reported by the National Institute of Standards and Technology on a report of calibration for a disappearing filament pyrometer are 3 °C at 1064.43 °C (5 °F at 1947.97 °F) and 8 °C at 2700 °C (14 °F at 4892 °F). In the case of automatic radiation thermometers uncertainties of 2 °C at 1064.43 °C (3.6 °F at 1947.97 °F) and 3 °C at 2700 °C (5.4 °F at 4892 °F) have been reported. However, the reported uncertainties will depend on the characteristics of the particular instrument submitted for calibration.

12.2.3 The uncertainty for measurements made by a particular operator with a disappearing filament pyrometer shall include components to account for the following: (*1*) the repeatability of the readings by the operator, (*2*) systematic offsets of readings by the operator from the true value, (*3*) any calibration change that has occurred in the disappearing filament pyrometer since its last calibration, and (*4*) the uncertainty of the original calibration.

12.3 *Uncertainty of Interpolated Values*—The uncertainty of interpolated values will depend upon the number of calibration points and the closeness with which the reference table used resembles the behavior of the particular thermocouple being calibrated. As the emf values in the reference table conform more accurately to the actual emf values of the thermocouple at the calibration temperatures, the number of calibration points required for a given uncertainty becomes fewer. In general, calibration points should be taken above and below temperatures that are obtained by interpolation and no extrapolation should be attempted. The uncertainty of interpolated values using the method of difference curves from table values are given in Table 1. These values assume the listed uncertainty at the calibration points.

12.4 *Uncertainty of Calibrated Thermocouples in Use*—In a strict sense, calibrations by the methods described in this test method apply only for conditions of use similar to those under which the calibrations were made. Once a thermocouple has been heated to high temperatures, changes may occur, even in relatively homogeneous thermoelements, that will cause the emf output of the thermocouple to be somewhat dependent upon the particular temperature gradient existing between the measuring and reference junctions. This is particularly true of thermocouples that have been calibrated at one depth of immersion and that are used at a shorter depth of immersion. A general quantitative assessment of errors that can arise from this source is not feasible, but the possibilities of such errors should be recognized in assigning uncertainties to temperature measurements made with calibrated thermocouples.

13. Keywords

13.1 high-temperature calibration; optical pyrometer; radiation thermometer; refractory metal thermocouple; thermocouple; thermocouple calibration; vacuum furnace

REFERENCES

(**1**) Thomas, D. B., "A Furnace for Thermocouple Calibrations to 2200 °C," *NBS Journal of Research*, Vol 66C, 1962, p. 255.

(**2**) Bedford, R. E., "Reference Tables for Platinum 20 % Rhodium/Platinum 5 % Rhodium Thermocouples," *Review of Scientific Instruments*, Vol 35, 1964, p. 1177.

(**3**) Daneman, H. L., "The Precise Calibration of Industrial Pyrometers to 1650 °C" *Proceedings of the Measurement Science Conference*, Anaheim, 1986.

(**4**) De Vos, J. C.," Evaluation of the Quality of a Blackbody," *Physica*, Vol 20, 1954, p. 669.

(**5**) Vollmer, J., "Study of the Effective Thermal Emittance of Cylindrical Cavities," *Journal of the Optical Society of America*, Vol 47, 1957, p. 926.

(**6**) Gouffe, A., "Corrections d'ouverture des corps-noirs artificiels compte tenu des diffusions multiples internes," *Revue d'Optique*, Vol 24, 1945, p. 1.

(**7**) Ono, A., Trusty, R. M., DeWitt, D. P., "Experimental and Theoretical Study on the Quality of Reference Blackbodies Formed by Lateral Holes on a Metallic Tube," in *Temperature: Its Measurement and Control in Science and Industry*, J. F. Schooley, ed., American Inst. Physics, New York, 1982, p. 541.

(**8**) *Theory and Practice of Radiation Thermometry*, D. P. DeWitt and G. D. Nutter, eds. (Wiley and Sons, New York, 1988).

(**9**) Waters, W. R., Walker, J. H., and Hattenburg, A. T., "NBS Measurement Services: Radiance Temperature Calibrations," *NBS Special Publication 250-7*, National Bureau of Standards, 1987.

(**10**) Waters, W. R., Saunders, R. D., and Hattenburg, A. T., "NBS Measurement Services: Spectral Radiance Calibrations," *NBS Special Publication 250-1*, National Bureau of Standards, 1987.

(**11**) Wyatt, C. L., *Radiometric Calibrations: Theory and Methods*, Academic, New York, 1978.

(**12**) Benedict, R. P., and Ashby, H. F., "Empirical Determination of Thermocouple Characteristics," *Transactions ASME Journal of Engineering for Power*, Vol 85, No. 1, January 1963, pp. 9–26.